1	COVER SHEET AND TABLE OF CONTENTS FOR SPEC SECTION 40 05 62 1.3F
2	8" MILLIKEN PLUG VALVE O & M MANUAL PAGE 3
3	8" MILLIKEN PLUG VALVE TEST REPORT PAGE 14
4	8" MILLIKEN PLUG VALVE PARTS LIST PAGE 15
5	8" MILLIKEN PLUG VALVE SHOP DRAWINGS PAGE 16
6	8" MILLIKEN PLUG VALVE – EMO ACTUATOR TEST REPORT PAGE 17
7	8" LIMITORQUE QX ELECTRONIC O & M MANUAL PAGE 20
8	12" MILLIKEN PLUG VALVE O & M MANUAL PAGE 120
9	12" MILLIKEN PLUG VALVE TEST REPORT PAGE 132
10	12" MILLIKEN PLUG VALVE MATERIAL LIST PAGE 133
11	12" MILLIKEN PLUG VALVE SHOP DRAWINGS PAGE 134
12	MANUFACTURER'S WARRANTY FOR 8" AND 12" MILLIKEN PLUG VALVES & ACTUATORS PAGE 135

AVERY

H.D. FOWLER COMPANY

SUBMITTAL FOR CITY OF BELLEVUE REUSE WATER - 8" & 12" PLUG VALVES O & M MANUAL PACKAGE

Date: 02/05/21

To
Company: Jc Constructors Inc
Contact: Sabino Papasodaro
Phone: (208) 447-0738
Fax: (208) 895-8106
Email: SABINO@JCCBOISE.COM

Project Information
Project: Bellevue Reuse Water System Imp.
Owner: City Of Bellevue
Contractor: Contractors
Engineer: Keller Associates-project# 210025-018

Submittal Information
Submittal Type: New
Revision: N
Subject: 8" & 12" PLUG VALVE O & M MANUAL PACKAGE
Spec Section:

Contact Information
Prepared By: DUANE LEWIS
Salesman: TOM MYERS
(208) 473-8963

The following items are submitted: PAGES DENOTES THE START OF EACH SECTION

Spec No	Item Submitted	Comments	Pages
SPEC. 40 05 62 1.3F	8" MILLIKEN PLUG VALVE O & M MANUAL		3
SPEC. 40 05 62 1.3F	8" MILLIKEN PLUG VALVE TEST REPORT		14
SPEC. 40 05 62 1.3F	8" MILLIKEN PLUG VALVE PARTS LIST		15
SPEC. 40 05 62 1.3F	8" MILLIKEN PLUG VALVE SHOP DRAWINGS		16
SPEC. 40 05 62 1.3F	8" MILLIKEN PLUG VALVE - EMO ACTUATOR TEST REPORT		17
SPEC. 40 05 62 1.3F	8" LIMITORQUE QX ELECTRONIC - O & M MANUAL		20
SPEC. 40 05 62 1.3F	12" MILLIKEN PLUG VALVE O & M MANUAL		120
SPEC. 40 05 62 1.3F	12" MILLIKEN PLUG VALVE TEST REPORT		132
SPEC. 40 05 62 1.3F	12" MILLIKEN PLUG VALVE MATERIAL LIST		133

SPEC. 40 05 62 1.3F	12" MILLIKEN PLUG VALVE SHOP DRAWINGS		134
SPEC. 40 05 62 1.3F	MANUFACTURER'S WARRANTY FOR 8" & 12" MILLIKEN PLUG VALVES & ACTUATORS	WARRANTY COVERS BOTH PLUG VALVES AND ACTUATORS	135

8" EMO PLUG VALVE
O & M MANUAL

May 2016

Millcentric Plug Valve Operation and Maintenance Manual Series 600

MILLIKEN®

Milliken
401 S. Highland Avenue
Aurora, Il 60506
Phone: (877) 655-6858
Fax: (630) 844-4160
Website: www.millikenvalve.com

Operations & Maintenance

Functional Description

PLUG VALVE

Plug valves are designed with eccentric rubber disc seating surfaces. The plug rotates 1/4 turn to provide shutoff in pipes. The eccentric seating action provides for tighter shutoff as the actuator is adjusted to provide for more rotation. The valve can be adjusted to a maximum of 10 degrees over travel. The valves can be used to regulate flow rate by positioning the plug between 15 and 90 degrees open.

Manually operated plug valves are powered with levers/2" nuts (valves with torque collars), or gear actuators, which convert multiple handwheel, chainwheel, or nut input turns into 1/4 turn valve operation. The travel of the valve plug is limited by physical stops in the torque collar for wrench operated valves, and in the actuator housing for gear operated valves.

CAUTION: Forcing the handwheel, chainwheel, or nut against the stops will not provide tighter shutoff of the valve and may damage the actuator. Only actuator adjustments will affect valve shutoff.

Motor operated valves are powered with gear actuators, which convert multiple motor input turns into 1/4 turn valve operation. The travel of the valve plug is limited by limit switches in the motor housing and physical stop in the actuator housing. Valve shutoff is affected by limit switch and physical stop settings.

CAUTION: Improperly set limit switches and/or physical stops may damage the motor and/or actuator.

Operations & Maintenance

Installation

When installing the valves, the seat end should be noted. The seat end of the valve is cast in raised letters on the appropriate flange of the valve. Generally, straightway valves should be installed with the highest pressure applied from the opposite end from the seat. This will tend to push the plug into the seat. On pump discharge installations the seat end should be towards the pump.

In the case where shut-off is required in both directions, the valve should be installed so that the highest differential pressure at shut-off is opposite the seat end.

When the service is of a clogging type, with suspended solids likely to build up in the valve body, it is recommended that the valve be installed with the media entering the seat end first. In extreme cases, the valve should be installed with the plug horizontal and rotating upward into the top portion of the valve body cavity to open.

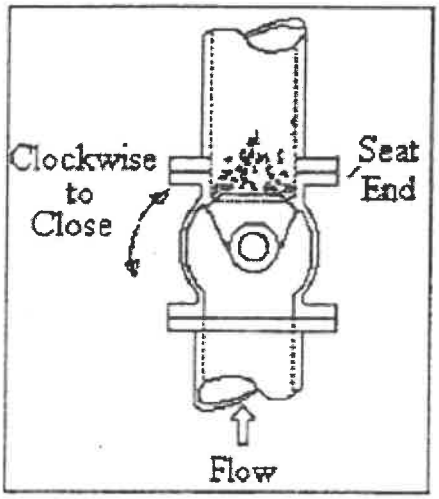

Vertical Pipeline

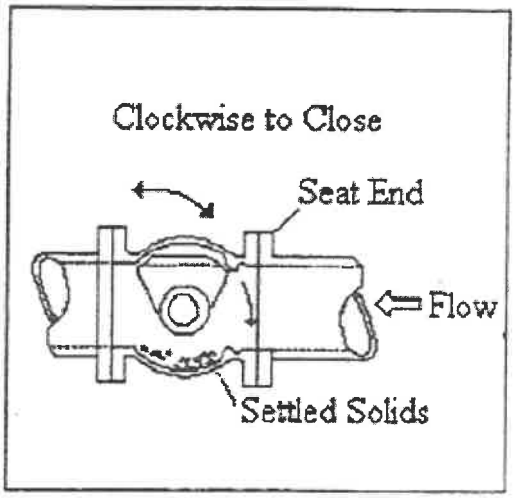

Horizontal Pipeline

Class 125 flanged end valves have ANSI B16.1 flat faced 125/150 flanges. Class 250 flanged end valves have ANSI B16.1 raised face 250 flanges. Standard ANSI B16.21 flanges and gaskets should be used to install the valves in the pipeline. Certain size valves utilize tapped holes on the top and bottom of the flange where a backing nut is not possible. Please check specific drawings for detailed information on sizes and quantities of hexagon head screws required on these valves.

Prior to installing valve, especially ones that are buried, they should be cycled open and closed several times to ensure they are in good working order and have not been damaged during shipment or storage.

Operations & Maintenance

Operating Instructions

MOTOR OPERATED ECCENTRIC PLUG VALVES

This manual describes the operating instructions for an Eccentric plug valve when equipped with an electric motor actuator. Specific wiring details are contained the motor actuator manual. General arrangement drawings are also provided to illustrate the fitup and installation of the valve and wiring of the motor. As with any plug valve, the actuator will cause the valve plug to rotate through ¼ turn to open or close the valve.

Motor Actuator Function and Use:

The motor actuator is designed to open and close the valve through its one quarter turn of rotation. It contains gearing so that many turns of the motor or hand wheel will slowly move the valve from open to close position or vice versa. Electrical controls are included in the motor actuator for local electrical control.

The output motion of the actuator is limited to about 100 degrees of output rotation by mechanical stops in the gearing. These are factory set and should not need adjustment. The actual positioning of the valve plug will be done by limit switches in the motor actuator. The switches are also set at the factory, but adjustment is sometimes required if the motor unit is installed on a separate mounting base or floorstand. Detailed procedures are given in the motor manual if adjustment is needed for the mechanical stops or the limit switches. The wiring and power requirements are given on wiring diagrams included in this instruction manual.

Important Safety Notice

All persons who will install, operate or adjust this equipment must read the instructions and drawings carefully. Injury and property damage may occur from improper use. It is understood that this equipment will be installed by individuals with knowledge and skills in electrical equipment. The manufacturer cannot be responsible for the misuse of this information or equipment, nor can it assume any resultant liability.

Operations & Maintenance

Maintenance Instructions

Actuated Valves

The Millcentric is designed and manufactured to be a long life valve under normal circumstances. It does not require any routine maintenance. Cycling the valve from full open to full closed on an annual basis will increase the life of the valve and operator components.

However, if maintenance is required, due to unusual wear or service conditions the following procedure should be followed:

Disassembly Procedure

Body

The Millcentric is a top entry valve therefore the body can remain in line during this operation. Remove the bolts holding the actuator bracket to the valve cap. You can then remove the actuator from the valve. With the valve de-pressurized, remove the hexagonal head cap screws that hold the bonnet to the valve body. Remove the bonnet, leaving the plug in the body. At this point, the plug, PTFE thrust washers, journal bearings and bonnet "O" ring are accessible and can be removed and replaced.

Care should be taken not to damage the plug elastomer or bonnet "O" rings upon reassembly.

Reverse the above process for reassembling the Millcentric.

Stem Seals

With the valve de-pressurized, using internal snap ring pliers, remove the snap ring and thrust washer. The "U" cup seals can now be pried out of the seal cavity. To replace reverse the above process. After reassembly, cycle valve from open to close approximately five times in order to ensure "U" cups have been properly seated.

Operations & Maintenance

Maintenance Instructions

Actuated Valves
To Replace "U" Cup Seals

The Millcentric is designed and manufactured to be a long life valve under normal operating conditions. It does not require any routine maintenance. Cycling the valve from fully open to fully closed on an annual basis will increase the life of the valve and actuator components.

However, if maintenance is required, due to unusual wear or service conditions, the following procedure should be followed:

- Remove the actuator, bracket and coupling from the valve body.
- Remove actuator and set aside.
- Remove the external snap ring and support collar.
- Remove the internal snap ring using snap ring pliers.
- Remove the thrust washer and the "U" cup seals are now visible.
- Using a screwdriver pry out the old seals.
- Apply a small amount of silicone or grease to the new "U" cup seals. This will help them slide in the packing cavity.
- Put a piece of shim stock into the cavity and put the "U" cup over it.
- Slide the "U" cup over the stem with shim stock against the stem. This will let any trapped air out of the packing cavity.
- Using two screwdrivers, coax the outer lip of the "U" cup into the cavity while pressing down on the top of the "U" cup with the other screwdriver. Continue to do this all the way around until the "U" cup is at the bottom of the packing cavity.
- Repeat this procedure with the second "U" cup.
- Replace the thrust washer and snap ring.
- Remount the actuator on the valve-ensure key is inserted in correct keyway.

Operations & Maintenance

Maintenance Instructions

Gear Operated or Actuated Valves
To Replace "U" Cup Seals

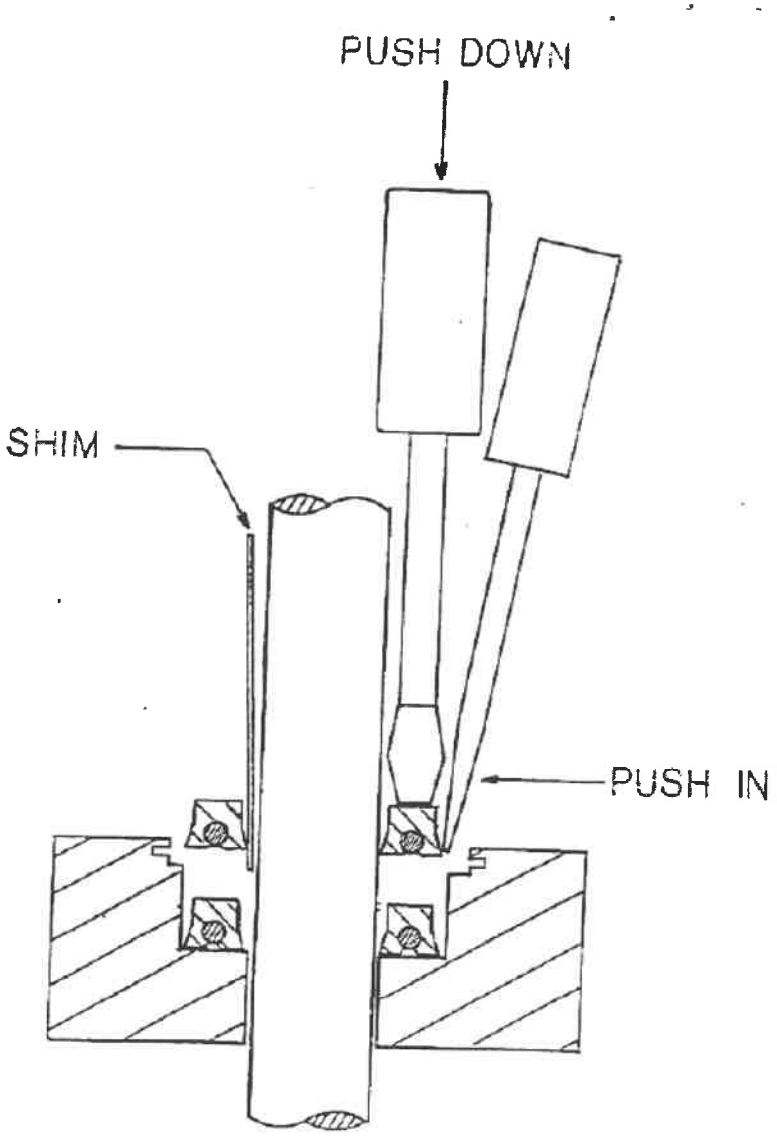

Operations & Maintenance

Trouble Shooting

Actuated Plug Valves

SYMPTOM	POSSIBLE CAUSE	ACTION
Valve will not open/ Valve will not close	-No Power Source	-Check incoming power source and/or replace fuses
	-Improper Signal	-Check actuating signal Sequence
	-Burned Out or Impaired Component	-Check & repair or replace motor or relay devices
Valve will not shutoff flow	-Improperly set Limit Switch	-Re-set limit switch
	-Actuator Torques Out	-Check for obstructions In valve

Operations & Maintenance

Lubrication Schedule

The Millcentric plug valve is a low maintenance non-lubricated eccentric plug valve. As such there is no required lubrication for the valve itself.

The manual worm gear operators where applicable are also sealed grease lubricated units and should not require any type of periodic lubrication. Should the unit need to have the lubricant replaced, it is recommended that **Shell "Gadus S2 V100"** be used, formally named "Alvania RL".

Operations & Maintenance

Storage Procedure

Milliken valves are shipped with the plugs in the open position. Care should be taken to maintain this position while the valves are in storage prior to installation in the pipeline.

Flanged valve end protectors (if supplied) should be kept on the valves until they are ready for installation. Special care should be given to mechanical joint valves to prevent damage to the internal pipe seating area.

Valves should be stored where internal contamination due to sand and mud can be kept to a minimum. Care should be taken to avoid direct sunlight on the plug elastomer during storage.

Electric, hydraulic and pneumatic valve actuators should be care for in accordance with the storage instructions of the actuator manufacturer.

Operations & Maintenance

Spare Parts List

The Milliken eccentric plug valve is a long life valve and does not require stocking spare parts.

MUELLER

QUALITY TEST REPORT
Certified Test Report - C517

To: KGS Northwest, LLC

PO Number: 11171

Project Name: _____

Pratt Reference: 2787051ML

Description: 8" Plug Valve

This is to certify that the Plug Valves supplied on the above referenced project were tested in accordance with Section 5.2 of AWWA C517-Latest Revision and successfully passed the test.

	Performance Test	**3 cycles open, closed**		
5.2.1.2	Leakage Test	12" & smaller	175 psi	15 seconds
		14"-24"	150 psi	30 seconds
		30" & larger	150 psi	60 seconds
5.2.1.1	Hydrostatic Test	12" & smaller	265 psi	30 seconds
		14"-24"	225 psi	60 seconds
		30" & larger	225 psi	180 seconds

Bob Newkirk
Pratt Quality Assurance Manager

Date: 10/21/2020

Document Prepared By: Shawn Forss Title: Customer Service Rep III

Date: 10/21/2020

For more information about Pratt or to view our full line of water products, please visit www.prattvalve.com or call Pratt customer service at 1.800.423.1323.

Mueller refers to one or more of Mueller Water Products, Inc., a Delaware corporation ("MWP"), and its subsidiaries. MWP and each of subsidiaries are legally separate and independent entities when providing products and services. MWP does not provide products or services to third parties. MWP and each of its subsidiaries are liable only for their own acts and omissions and not those of each other. MWP brands include Mueller®, Echologics®, Hydro Gate®, Hydro-Guard®, Jones®, Mi.Net®, Milliken®, Pratt®, Singer®, and U.S. Pipe Valve & Hydrant. Please see www.muellerwp.com/about to learn more.

Copyright © 2018 Henry Pratt Company, LLC. All Rights Reserved. The trademarks, logos and service marks displayed in this document are the property of Mueller Water Products, Inc., its affiliates or other third parties. Products marked with a section symbol (§) are subject to patents or patent applications. For details, visit www.mwppat.com. These products are intended for use in potable water applications. Please contact your Mueller Sales or Customer Service Representative concerning any other application(s).

8" PLUG VALVE
MATERIAL LIST

Standard Materials of Construction, Fig. 601/600, 12" & Smaller

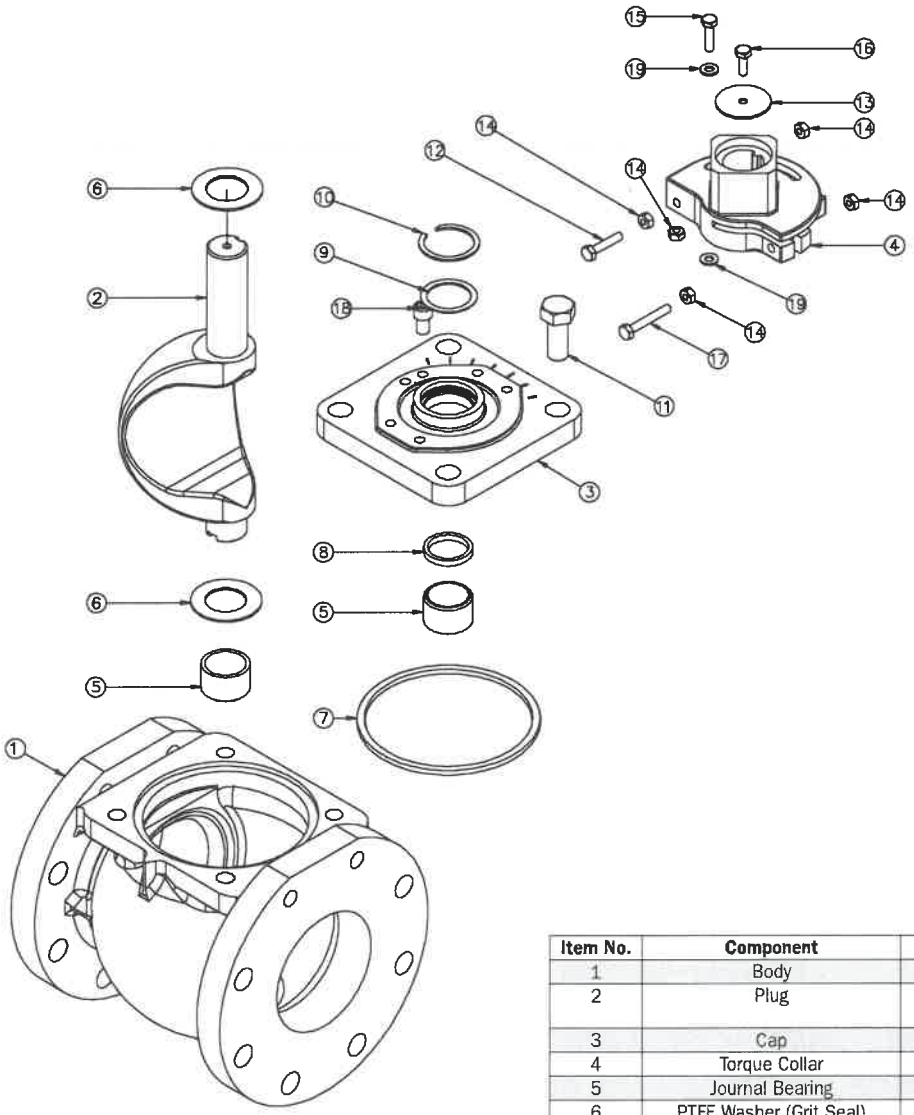

Item No.	Component	Material
1	Body	Cast Iron A126 Class B
2	Plug	Rubber Coated Ductile Iron ASTM A536
3	Cap	Cast Iron A126 Class B
4	Torque Collar	Ductile Iron ASTM A536
5	Journal Bearing	St.Steel — ANSI 316
6	PTFE Washer (Grit Seal)	PTFE
7	O Ring	Elas. as Spec.
8	U Cup Seal	Elas. as Spec.
9	Washer	Brass — ASTM B-138-675
10	Internal Snap Ring	Spring Steel
11	Setscrew	Steel (Zinc Plated)
12*	Closed Stop	Steel (Zinc Plated)
13*	Locking Washer	Steel
14*	Nut	Steel (Zinc Plated)
15*	Open Stop	Steel (Zinc Plated)
16*	Setscrew	Steel (Zinc Plated)
17*	Torque Bolt	Steel (Zinc Plated)
18*	Travel Stop	Steel
19*	Washer	Steel

*NOTE: Torque Collar Assembly on 8" and Smaller

SHOP DRAWING FROM FACTORY INDICATING EMO ACTUATOR POSITION.

VALVE SIZE	A	B	C	D	E	F	G	H	J	K	L	M
3	8.00	3.41	3.75	3	6.00	7.50	0.75	4	--	--	0.75	4.63
4	9.00	4.38	4.50	4	7.50	9.00	0.75	6	0.63	2	0.94	4.50
5	10.00	5.63	5.75	5	8.50	10.00	0.88	6	0.75	2	0.94	4.50
6	10.50	5.63	5.75	6	9.50	11.00	0.88	6	0.75	2	1.00	4.50
8	11.50	7.56	7.63	8	11.75	13.50	0.88	6	0.75	2	1.13	6.75
10	13.00	9.25	8.88	10	14.25	16.00	1.00	8	0.88	4	1.19	6.00
12	14.00	10.88	10.00	12	17.00	19.00	1.00	8	0.88	4	1.25	6.00

ACTUATOR SIZE	N	O	P	Q	R
QX-1 & 2	12-1/2	7-1/2	7	11-3/8	5-3/4
QX-3, 4, & 5	14-1/8	7-1/4	8	11-3/8	5-3/4

REFER TO VENDOR ACTUATOR DRAWING FOR CERTIFIED DIMENSION

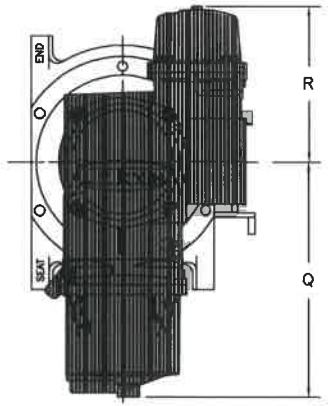

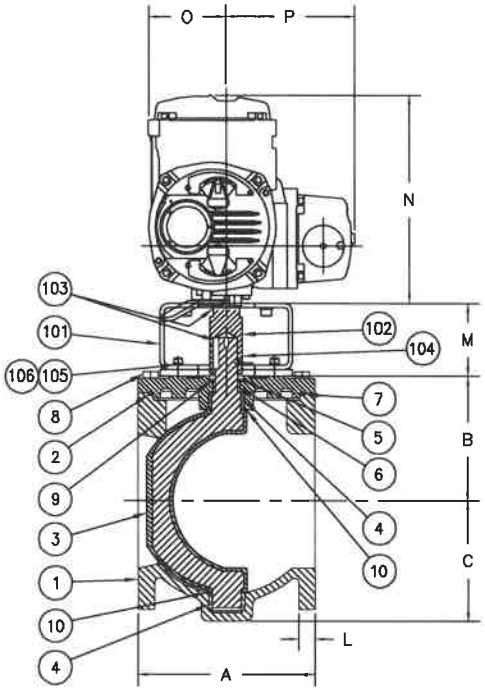

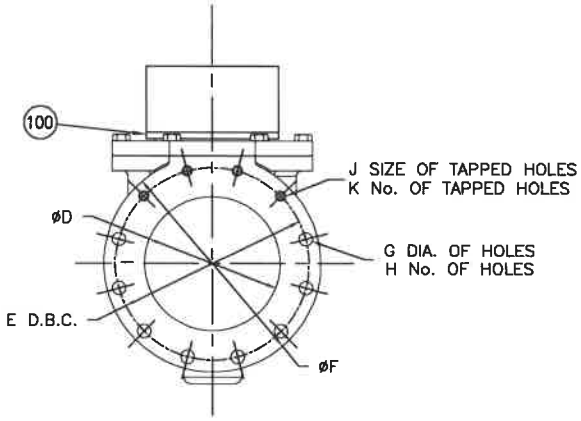

DRAWING IS NOT TO SCALE

DRAWINGS ARE FOR INFORMATION PURPOSES ONLY; PLEASE REQUEST CERTIFIED DRAWINGS BEFORE PREPARING PIPE DIAGRAMS

THIS DRAWING IS PROPERTY OF
MILLIKEN VALVE
AND MUST NOT BE USED IN ANY WAY PREJUDICAL TO THEIR INTREST

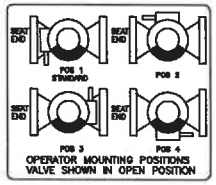

OPERATOR MOUNTING POSITIONS
VALVE SHOWN IN OPEN POSITION

*RISER RING ONLY ON 3"-8"

ITEM	QTY.	DESCRIPTION	MATERIAL
106	AR	LOCK WASHER	STEEL/ZINC
105	AR	CAP SCREW	STEEL/ZINC
104	1	SET SCREW	STEEL/ZINC
103	1	KEY	STEEL
102	1	COUPLING	STEEL
101	1	BRACKET	STEEL
100*	1	RISER RING	STEEL
50	1	AUMA SQ SERIES ACTUATOR	
10	2	GRIT SEAL	PTFE
9	1	SEAL RETAINING RING	BRASS
8	AR	H.H. CAP SCREW	☐STEEL ☐STN. STEEL
7	1	O RING	ELAS. AS SPEC.
6	2	U CUP SEALS	ELAS. AS SPEC.
5	2	SNAP RING	SPRING STEEL
4	2	SLEEVE BEARING	STAINLESS STEEL
3	1	PLUG ELASTOMER AS SPEC.	DUCTILE IRON
2	1	CAP	CAST IRON
1	1	BODY	CAST IRON

MILLIKEN

BY	DATE	SCALE
MZ	02/24/2016	NONE

CH'K'D: ALEX ADAMS
DIMENSIONS: INCHES

NO.	DATE	REVISIONS	BY

TITLE: 3"-12" FIG. 601 MPV FLANGED, W/ LIMITORQUE QX SERIES ACTUATOR

DWG. NO. S49184

QX UNITS
FLOWSERVE
DOCUMENTATION OF INSPECTIONS

Instructions: As each attribute is verified, check the appropriate blocks and initial under the operation.

LIMITORQUE ORDER NUMBER 183791	**ITEM NUMBER** 001	
WORK ORDER NUMBER 1386066	**MFG. REV. NUMBER**	**UNIT SIZE**
SERIAL NUMBERS L1263086 - L1263087		**QX** 4

THESE UNITS HAVE BEEN BUILT AND ARE IN COMPLIANCE WITH THE BILL OF MATERIAL WITHOUT ANY DEVIATIONS OR SUBSTITUTIONS. IN ADDITION, ALL OF THE PERTINENT ENGINEERING AND STANDARD ASSEMBLY PROCEDURES HAVE BEEN FOLLOWED DURING THE ENTIRE CONSTRUCTION

MECHANICAL ASSEMBLY		**EOL TEST**	
1. Record Bases - MSS or ISO	✓	1. Control Cover nameplate installed	✓
2. Pressure Test completed per EIP - 355	✓	2. OEM and user kits included with actuator	✓
ELECTRICAL ASSEMBLY		3. O-ring installed on terminal cover	✓
1. Verify correct motor installed on unit	✓	4. Check LED installed per BOM	✓
2. All Compartment cover screws installed	✓	5. Check if yellow label has been installed	✓
3. Tie wraps used to locate wire harness in place	✓	6. Verify serial number & order number	✓
4. WP Cover ☒ XP Cover ☐ * Epoxy Cover ☐ * See BOM for Routine Pressure Test Requirements		7. Verify correct Torque Nut per BOM is installed, N/A if not required	✓
		8. Speed ¼ Turn ☒ Multiturn ☐ 360° Unit ☐	
5. Pressure Test complete per EIP-355	✓	9. Verify correct hardware used per BOM SST ☒ ST ☐	
		10. After EOL test verify the correct base plate is installed and has the correct threads per BOM and the threads aren't damaged.	✓
6. Megger Test Required Yes ☐ No ☒		**FINAL INSPECTION**	
		1. Baseplate- Select all that apply: MSS: FA-05 ☐ FA-07 ☐ FA-10 ☐ FA-12 ☐ FA-14 ☒ N/A ☐ ISO: F-05 ☐ F-07 ☐ F-10 ☐ F-12 ☐ F-14 ☐ N/A ☐	
7. Routine Motor Test Required Yes ☐ No ☒		2. Verify correct Torque Nut is installed per BOM, N/A if not required	✓
HI-POT REQUIREMENTS CSA ☐ Non-CSA ☒ Increased Safety ☐		3. Verify Nameplate matches BOM	✓
Serialization is required for ATEX, ANZEX, IECEx, INMENTRO and GOST orders. Attach Sheet L 3407 Cont. for multiple units:		4. Verify Hydrostatic test is complete if required per BOM and unit is properly labeled.	MA
		5. External ground lug installed and free of paint	✓
Motor Hsg S/N _____		6. Hand wheel rotation and caution tag installed.	✓
TB Cmpt Cover S/N _____		7. Tap & Return Nuts Required Yes ☐ No ☒	
Ctl Cmpt S/N _____		8. Check External Hardware SST ☒ ST ☐	
Hsg S/N _____		9. WP Cover ☒ XP Cover ☐ * Epoxy Cover ☐	

MECHANICAL ASSEMBLY	INITIALS	RH	DATE	10-22-20
CONTROL ASSY & DIELECTRIC TEST (Electrical Assembly)	INITIALS	DJ	DATE	10-22-20
ELECTRONIC & FUNCTIONAL TEST (EOL Test)	INITIALS	CW	DATE	10-22-20
FINAL INSPECTION	INITIALS	[illegible]	DATE	10-23-20
MANUAL TYPE	ITEM:	SERIAL NO.		
List any loose items				

MX/QX Test Report: Pass

FLOWSERVE
Limitorque Actuation Systems

Report Date: 10/22/2020
Test Date: 10/22/2020
Unit Serial Number: L1263087
Unit Order Number 183791.001
Unit Model: QX-4
Unit Speed: 0.5 RPM
Customer Torque: 623 ft-lb_f

Test Stand Software Version: MQx EOL v1.38.vi
Test Stand Serial Number: 021

Nameplate Electrical Requirements
Voltage: 460 VAC 60 Hz 3 Phase
Amperage: 1.25 Amps (Full Load)

Firmware Versions: 19Q07.03 - 92 - 92 - MC.07.17 - BT.01.02
QA Stamp: 66110469
QA Date & Time: 20201022 - 132755

Thermistor:	Pass	Handwheel Operation:	Pass	Close & Open
Display Function:	Pass	Digital Inputs:	Pass	
Knobs Function:	Pass	Relay Outputs:	Pass	OA
Monitor Relay:	Pass	Analog Inputs:	Pass	
Power Out:	Pass 24 VDC & 110 VAC			
		Bluetooth:	Pass	

Test Voltage:	460 VAC		
Limit Switch - Close:	Pass		
Limit Switch - Open:	Pass		
Full Load - Close:	Pass	0.31 Amps	
Full Load - Open:	Pass	0.28 Amps	
40% Torque - Close:	Pass	393 ft-lb_f	
40% Torque - Open:	Pass	421 ft-lb_f	
100% Torque - Close:	Pass	865 ft-lb_f	
100% Torque - Open:	Pass	881 ft-lb_f	
Customer Torque - Close:	Pass	669 ft-lb_f	Torque Switch: 71%
Customer Torque - Open:	Pass	630 ft-lb_f	Torque Switch: 59%

Tester ID: CW

HiPot Test: DJ

MX/QX Test Report: Pass

FLOWSERVE
Limitorque Actuation Systems

Report Date: 10/22/2020
Test Date: 10/22/2020
Unit Serial Number: L1263086
Unit Order Number 183791.001
Unit Model: QX-4
Unit Speed: 0.5 RPM
Customer Torque: 623 ft-lb_f

Test Stand Software Version: MQx EOL v1.38.vi
Test Stand Serial Number: 021

Nameplate Electrical Requirements
Voltage: 460 VAC 60 Hz 3 Phase
Amperage: 1.25 Amps (Full Load)

Firmware Versions: 19Q07.03 - 92 - 92 - MC.07.17 - BT.01.02
QA Stamp: 66110663
QA Date & Time: 20201022 - 115755

Thermistor:	Pass		Handwheel Operation:	Pass	Close & Open
Display Function:	Pass		Digital Inputs:	Pass	
Knobs Function:	Pass		Relay Outputs:	Pass	OA
Monitor Relay:	Pass		Analog Inputs:	Pass	
Power Out:	Pass	24 VDC & 110 VAC			
			Bluetooth:	Pass	

Test Voltage:	460 VAC		
Limit Switch - Close:	Pass		
Limit Switch - Open:	Pass		
Full Load - Close:	Pass	0.32 Amps	
Full Load - Open:	Pass	0.3 Amps	
40% Torque - Close:	Pass	375 ft-lb_f	
40% Torque - Open:	Pass	392 ft-lb_f	
100% Torque - Close:	Pass	794 ft-lb_f	
100% Torque - Open:	Pass	858 ft-lb_f	
Customer Torque - Close:	Pass	679 ft-lb_f	Torque Switch: 78%
Customer Torque - Open:	Pass	650 ft-lb_f	Torque Switch: 66%

Tester ID: CW

HiPot Test: DJ

FLOWSERVE

USER INSTRUCTIONS

Limitorque QX Electronic Actuator

FCD LMENIM3306-10-AQ – 05/19

Installation
Operation
Maintenance

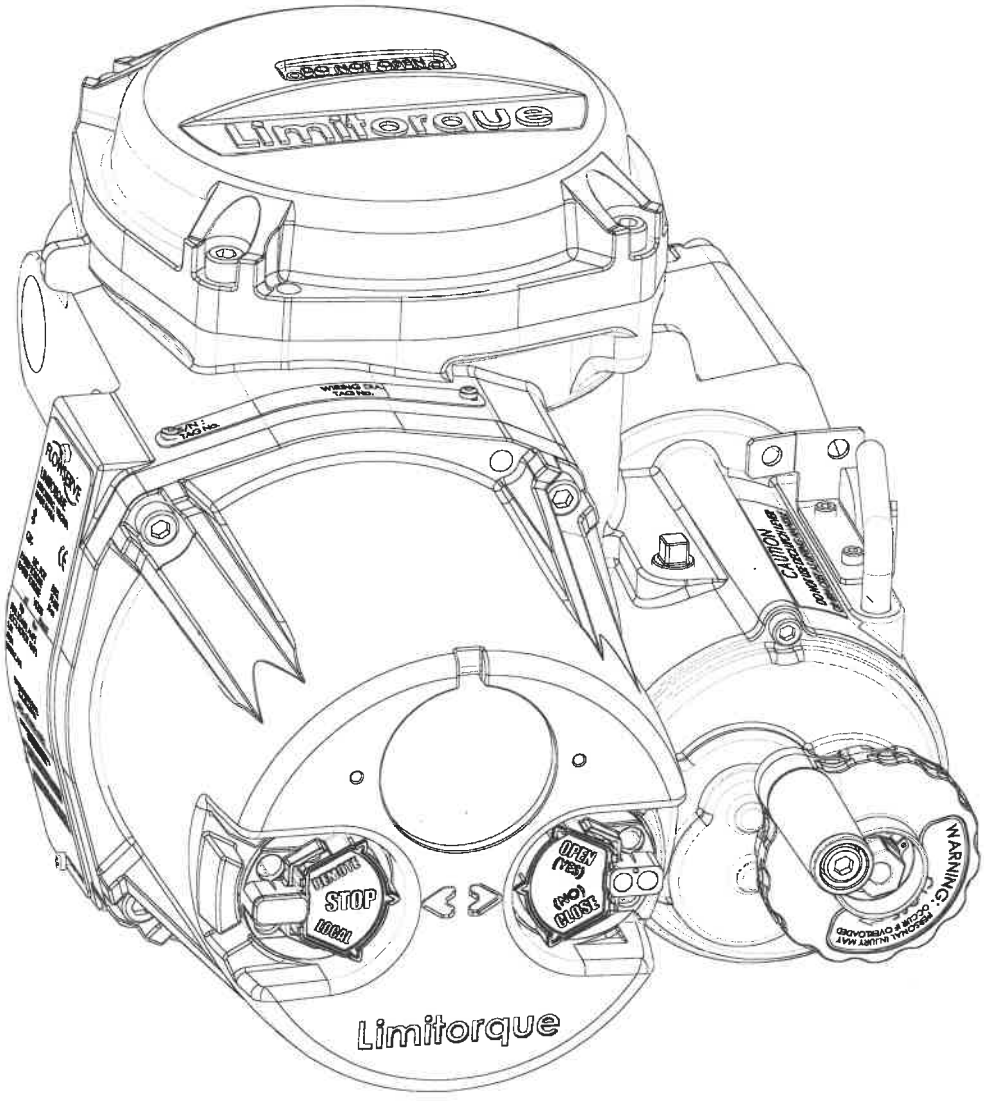

Experience In Motion

Contents

1	**Important Notes**	**8**
2	**Quick Start**	**10**
	2.1 Calibrate – Position Limits	11
	2.1.1 Electrical Operation Feature	11
	2.1.2 Handwheel Operation Feature	13
	2.1.3 Entering the Setup Mode	16
	2.2 DDC Option	16
	2.3 Check the Settings	16
3	**Installation and Operation**	**17**
	3.1 Preparing the Stem Nut	17
	3.1.1 Torque Applications	17
	3.2 Mechanical Installation onto Valve or Gearbox	19
	3.3 Electrical Connections	19
	3.3.1 Removing Terminal Cover	19
	3.3.2 Terminal Compartment Documents	19
	3.3.3 Sealing Cable/Conduit Entries	20
	3.3.4 Recommended Terminal Connections	20
	3.3.5 Termination of Cables	22
	3.3.6 Cable Connections	22
	3.3.7 Network Installations	23
	3.3.8 Foundation Fieldbus Installation	26
	3.3.9 Network Wiring – Profibus DP/PA Installation	27
	3.3.10 Network Wiring – DeviceNet	28
	3.3.11 Replacing Terminal Cover	28
	3.3.12 External Earth/Ground Connections	28
	3.4 Terminal Block Shield Installation	28
	3.5 Commissioning the Actuator	29
	3.5.1 Default Configuration Set	29
	3.5.2 View the Existing Settings	31
	3.5.3 Entering the Setup Mode	31
	3.5.4 Setting Position Limits	32
	3.6 Operating the QX Actuator	35
	3.6.1 Manual Operation	35
	3.6.2 Electrical Operation	35
	3.6.3 Local Control	35
	3.6.4 Remote Control	36
	3.6.5 Local Indication	36
4	**Customizing the Actuator**	**38**
	4.1 Changing the Existing Settings	38
	4.2 Password Entry	40
	4.3 New Password	41
	4.4 Valve Setup	42
	4.4.1 Close Direction	42
	4.4.2 Close Seating	42
	4.4.3 Open Seating	42
	4.5 Torque Switch Timer	43
	4.5.1 Status	43

4.5.2 Torque Timer	43
4.6 Operating Time	44
4.7 Torque Setup	44
4.7.1 Close Torque Valve or Open Torque Valve	45
4.8 Position Setup	45
4.8.1 Set Position Limits for Electrical Operation	45
4.8.2 Set Position Limits for Manual Operation	46
4.9 Modutronic Option	48
4.9.1 Status	48
4.9.2 Proportional Band	48
4.9.3 Fail Position	48
4.9.4 Deadband	48
4.9.5 Polarity (20 mA)	48
4.9.6 Delay After Stop	49
4.9.7 4-20 mA Signal Range	49
4.9.8 Set High Reference	49
4.9.9 Set Low Reference	49
4.9.10 Modutronic LCD Display	50
4.9.11 Modutronic Filter Factor (QXM only)	50
4.10 DDC Option	50
4.10.1 Status	51
4.10.2 Network Address	51
4.10.3 Protocol	51
4.10.4 Analog Scale	51
4.10.5 ESD Action	51
4.10.6 Proportional Band	52
4.10.7 Deadband	52
4.10.8 Offset	52
4.10.9 Move To	52
4.10.10 Comm Loss Delay	52
4.10.11 Comm Loss Action	52
4.11 FF Option	52
4.11.1 Status	53
4.11.2 Terminate Bus	53
4.11.3 Analog Scale	53
4.11.4 ESD Action	53
4.11.5 OPEN/CLOSE Mode	53
4.11.6 Proportional Band	53
4.11.7 Deadband	53
4.11.8 Comm Loss Delay	54
4.11.9 Comm Loss Action	54
4.12 PB Option	54
4.12.1 Status	55
4.12.2 PB DP Operation	55
4.12.3 Comm Loss Delay	56
4.12.4 Comm Loss Action	56
4.13 DN Option	56
4.13.1 Status	57
4.13.2 Baud Rate	57
4.13.3 Network Address	57
4.13.4 ESD Action	57

4.13.5 Proportional Band	57
4.13.6 Deadband	57
4.13.7 Comm Loss Delay	58
4.13.8 Comm Loss Action	58
4.14 HART Option	59
4.14.1 Status	59
4.14.2 Multi-Drop	59
4.14.3 Input Action	59
4.14.4 Fail Postion	59
4.14.5 Polling Adress	60
4.14.6 Save Setting	60
4.14.7 Change Prop/Deadband	60
4.14.8 ESD Action	60
4.15 Status and Alarm Contacts	61
4.15.1 Status and Alarm Contact Default Settings	62
4.15.2 Status Function	63
4.15.3 Contact	63
4.15.4 Valve Position	63
4.16 Two-speed Timer (Optional)	64
4.16.1 Status	64
4.16.2 Start Position	64
4.16.3 Stop Position	64
4.16.4 Pulse Time – ON	64
4.16.5 Pulse Time – OFF	65
4.17 Change Analog Out	65
4.17.1 APT Polarity Option	67
4.17.2 ATT Polarity Option	67
4.18 Remote Mode	68
4.19 Local Control	68
4.19.1 LED Customization	69
4.20 ESD (Emergency Shutdown) Overrides	69
4.20.1 ESD Override	69
4.20.2 Inhibit	70
4.20.3 Local Command	70
4.20.4 Stop	70
4.20.5 Jammed Valve*	70
4.20.6 Lost Phase*	70
4.20.7 Overtorque*	71
4.20.8 Motor Thermostat	71
4.20.9 Oil Over Temperature	71
4.20.10 Two-Speed Timer	71
4.20.11 Network ESD	72
4.20.12 Torque Switch Timer	72
4.21 Inputs	72
4.21.1 Input Standard Remote Control	72
4.21.2 Status	73
4.21.3 Custom Input Mode #1 – Momentary ESD/PSESD (Optional)	73
4.21.4 Custom Input Mode #2 – Momentary ESD/CSE (Optional)	76
4.21.5 Custom Input Mode #3 – ESD Time Delay Relay	76
4.21.6 Custom Input Mode #4 – Multi-Position Mode (Optional)	77

	4.22 Monitor Relay	78
	4.23 Diagnostic Reset	79
	4.24 TAG Number	80
	4.25 LCD Contrast	81
	4.26 Motor Thermostat	81
	4.27 Change Valve Data	81
	4.28 Change Port	82
5	**Troubleshooting**	**83**
	5.1 View Diagnostics Routine	83
	5.2 Troubleshooting Problems/Corrective Action	83
	5.2.1 Actuator Fails to Operate	84
	5.2.2 Jammed Valve Detected	84
	5.2.3 Actuator Operates but Does Not Drive Valve	85
	5.2.4 Valve Does Not Seat Correctly	85
	5.2.5 Status Messages	85
	5.3 View Diagnostics	87
	5.4 View Hardware Status	88
	5.5 View Motor Status	89
	5.6 View Power Supply	89
	5.7 View Identification	89
	5.8 View Torque Profile	90
	5.9 View Operation Log	90
	5.10 View DNET Status?	91
6	**Maintenance**	**93**
	6.1 Lubrication	93
	6.1.1 Oil Capacities	93
	6.1.2 Checking Oil Level	93
7	**Regulatory Information**	**94**
	7.1 Specific Conditions for Safe Use — Atex/Cenelec/IECEx Applications	97
	7.2 Statement of Compliance with Applicable European Directives	97

Figures

Figure 1.1 – QX-05 Actuator	8
Figure 2.1 – Electrical operation	13
Figure 2.2 – Handwheel operation	15
Figure 2.3 – QX travel stops	15
Figure 3.1 – Top view - stem nut with standard keyway position	18
Figure 3.2 – Exploded view of QX bases	18
Figure 3.3 – Power terminal connector size limitations	20
Figure 3.4 – Terminal block	21
Figure 3.5 – Control terminal connector size limitations	21
Figure 3.6 – View of terminal block	23
Figure 3.7 – Standard wiring diagram - three phase shown	24
Figure 3.8 – Removing outer plastic jacket	24
Figure 3.9 – Separating cable parts	25
Figure 3.10 – Stripping conductors and applying heat shrink tubing	25
Figure 3.11 – Ring tongue connectors	25
Figure 3.12 – Terminal block shield	29
Figure 3.13 – User network connection for loop topology	30
Figure 3.14 – External earth/ground connection – housing	30
Figure 3.15 – View settings	32
Figure 3.16 – Position setup – electrical operation	34
Figure 3.17 – Declutch lever shows direction of engagement (QX-05 shown)	35
Figure 3.18 – Control panel	36
Figure 4.1 – Entering the setup mode	39
Figure 4.2 – Main menu selections	39
Figure 4.3 – Changing settings	40
Figure 4.4 – Password entry	41
Figure 4.5 – New password	41
Figure 4.6 – Valve setup	42
Figure 4.7 – Torque switch timer	43
Figure 4.8 – Operating Time Setup	44
Figure 4.9 – Torque setup	44
Figure 4.10 – Typical XP nameplate	45
Figure 4.11 – Electrical operation	47
Figure 4.12 – Handwheel operation	47
Figure 4.13 – Modutronic option	49
Figure 4.14 – Modutronic signals	50
Figure 4.15 – DDC	51
Figure 4.16 – Foundation Fieldbus	54
Figure 4.17 – Profibus DP	55
Figure 4.18 – Profibus PA	56
Figure 4.19 – DN Option	58
Figure 4.20 – HART	59
Figure 4.21 – Status and alarm contacts (Shown with optional boards added)	63
Figure 4.22 – Two-speed timers	65
Figure 4.23 – Change Analog Out	65
Figure 4.24 – Change Analog Out Voltage – APT	66
Figure 4.25 – Change Analog Out Current – APT	66

Figure 4.26 – Change Analog Out Voltage – ATT	66
Figure 4.27 – Change Analog Out Current – ATT	67
Figure 4.28 – Remote mode	68
Figure 4.29 – Local control	69
Figure 4.30 – ESD Overrides	70
Figure 4.31 – Inputs	73
Figure 4.32 – Custom Input Mode	75
Figure 4.33 – Monitor relay	79
Figure 4.34 – Diagnostic reset	80
Figure 4.35 – TAG number	80
Figure 4.36 – LCD contrast	81
Figure 4.37 – Motor thermostat	81
Figure 4.38 – Change valve data	82
Figure 4.39 – Change port and Bluetooth settings	82
Figure 5.1 – Initialize routine	87
Figure 5.2 – Diagnostic overview	88
Figure 5.3 – View hardware status	88
Figure 5.4 – View motor status	89
Figure 5.5 – View power supply	89
Figure 5.6 – View identification	89
Figure 5.7 – View torque profile	90
Figure 5.8 – View operation log	91
Figure 5.9 – View DNET status	91
Figure 7.1 – Typical ATEX nameplate	98
Figure 7.2 – Typical IECE nameplate	99

Tables

Table 3.1 – Available QX Flanges	17
Table 3.2 – Terminal block rating; power terminals	21
Table 3.3 – Terminal block rating; control terminals	22
Table 3.4 – Required ratings for external wires	23
Table 3.5 – Loop topology connections	26
Table 3.6 – Foundation Fieldbus connections	27
Table 3.7 – Profibus cable specifications	27
Table 3.8 – DeviceNet cable specifications	28
Table 3.9 – Default configurations	30
Table 3.10 – LED Indicators – default settings	37
Table 4.1 – Digital Input Terminals	77
Table 6.1 – Oil capacities	93

Figure 1.1 – QX-05 Actuator

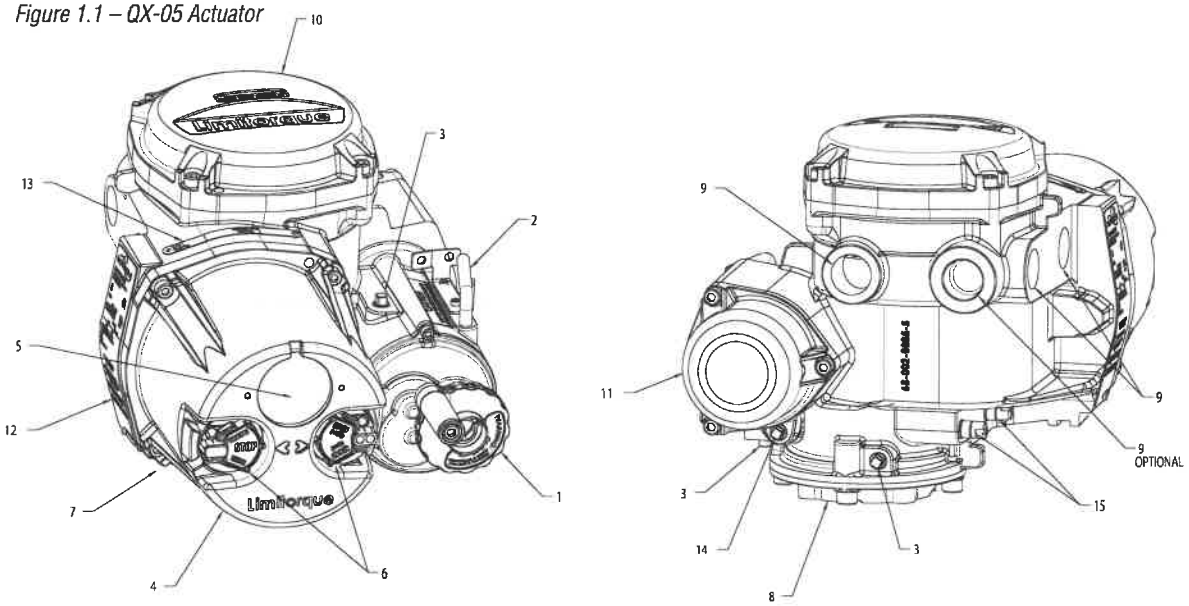

Piece	Description
1	Handwheel
2	Declutch Lever (QX-05)
3	Oil Fill
4	Controls Cover
5	LCD

Piece	Description
6	Control Knob
7	Ground Lug
8	Baseplate
9	Conduit Entry
10	Terminal Compartment

Piece	Description
11	Motor
12	Certification Nameplate
13	Tag Nameplate
14	Oil Plug
15	Stem Nut Stops

1 Important Notes

- Please read this manual in its entirety before attempting to install or operate your QX actuator. A full understanding of the installation and operation options will assist you in installing the actuator in the most effective manner. Limitorque has designed the QX actuator for long life even in the harshest environments. Flexible control and protection options are provided to ensure the actuator meets your requirements.
- All actuator enclosures are sealed by O-rings, and cable entries are supplied with threaded plugs to protect the terminal compartment until the unit is wired. If the actuator cannot be installed immediately, it is recommended that it be stored in a clean, dry place, preferably in an area that is not subject to large fluctuations in temperature.
- Disconnect all incoming power before opening any cover on the actuator. The user/operator must ensure that safe working practices are employed at all times and are in accordance with local or national standards that are enforced at the particular site.
- To install and commission the actuator, only the terminal compartment cover needs to be removed. See Figure 1.1, Item 10. Settings for commissioning the actuator are done externally; therefore, no other covers need to be removed. The actuator was assembled in ideal dry conditions and the total sealing of the enclosure protects all electrical components against deterioration.

NOTE: Removal of any cover, other than the terminal compartment cover, will invalidate the unit warranty. Exposure of actuator components to an environment that results in deterioration of internal components will also invalidate the unit's warranty.

- During final field installation, ensure that all cable entries are correctly sealed in accordance with National Standards or Regulatory Authorities. All temporary transit plugs must be removed and any unused cable entries closed in an approved manner. See Section 3.3.3, Sealing Cable/Conduit Entries.

2 Quick Start

Quick Start provides step-by-step instructions for commissioning each QX actuator. These instructions are for the following:

- Position limits calibration – can be performed one of two ways:
  1. Electrical operation: See Section 2.1.2, Electrical Operation Feature.
  2. Handwheel operation: See Section 2.1.2, Handwheel Operation Feature.
- DDC operation: See Section 2.2, DDC Option.

When these Quick Start instructions are complete, the position limits will be set and the actuator will be ready for normal operation.

NOTE: Units are shipped with default operating time values based on unit size:

QX-1: 5-20 sec, default 15 sec

QX-2: 8-30 sec, default 30 sec

QX-3: 15-60 sec, default 60 sec

QX-4: 30-120 sec, default 60 sec

QX-5: 60-120 sec, default 60 sec

These times are based on a 90° open to close span.

The operating time can be set as desired by following the instructions in document LMENIM3306, QX Actuator Instruction, Operation and Maintenance Manual.

2.1 Calibrate Position Limits

1. Confirm that the QX actuator is correctly installed on the valve as described in Section 3 Installation and Operation.
2. Refer to the nameplate for the correct main power supply voltage. Switch on the main power to the unit.
3. Turn the red knob to the "STOP" position. The "SET UP ENGLISH?" message will be displayed, select "YES". The "SET CLOSE POSITION LIMIT?" message will then be displayed. Proceed with setting the open and close limits of the valve.
4. Calibrate end position limits one of two ways:
   - Electrically, using the control panel. See Section 2.1.1, Electrical Operation Feature.
   - Manually, using the handwheel. See Section 2.1.2, Handwheel Operation Feature.

Once the position limits have been set, the LCD message will indicate the valve position as a percentage of the valve opening.

While setting limit switches, place the red selector knob in the "LOCAL" position to permit the actuator to run open or closed in push-to-run mode (inching) only.

⚠ **CAUTION:** Extreme care must be taken as the valve approaches its end position.

The unit will not function with the red selector knob in the "REMOTE" position until both limit switches are set.

The existing configuration of the actuator/valve parameters may be viewed by entering the "SETUP" mode.

2.1.1 Electrical Operation Feature

This feature allows for quick and simple calibration. From a virgin startup, the "SET CLOSE POSITION LIMIT?" message will be displayed once the setup language has been selected.

NOTE: Refer to Figure 2.1 – Electrical operation as a guide during setup

⚠ **CAUTION:** Do not adjust close stop while stop is loaded. It is highly recommended that the stops be turned until they are almost removed from the housing before setting the limits. Once the limits have been set, then the stops maybe tightened. Refer to Figure 2.3.

Closed Position Limit

1. "SET CLOSE POSITION LIMIT?" is displayed on the LCD.
2. Select "YES." The "CLOSE VALVE - OK?" message is displayed.
3. Switch the actuator to "LOCAL" control and use the open/close switch to position the valve to the desired closed position.
4. Back out the close stop if needed. First loosen the screw securing the stop then move stop.

NOTE: Do not adjust close stop while stop is loaded.

5. When the valve is in the desired position, switch the actuator back to "STOP" and select "YES" again. The LCD will read "SAVE CLOSE LIMIT OK?"
6. Select "YES" if the valve's close limit position is correct. The close position limit is set.
7. Turn the close stop against the drive sleeve, then back off the close stop from the drive sleeve approximately 0.5 to 1.5 turns, ensuring the stop does not contact the drive sleeve.

⚠ **CAUTION:** Do not adjust close stop while stop is loaded. It is highly recommended that the stops be turned until they are almost removed from the housing before setting the limits. Once the limits have been set, then the stops maybe tightened. Refer to Figure 2.3.

Open Position Limit

8. "SET OPEN POSITION LIMIT?" is displayed on the LCD.
9. Select "YES." The "OPEN VALVE - OK?" message is displayed.
10. Switch the actuator to "LOCAL" control and use the open/close switch to position the valve to the desired open position.
11. Back out the open stop if needed. First loosen the screw securing the stop then move stop.

NOTE: Do not adjust open stop while stop is loaded.

12. When the valve is in the desired position, switch the actuator back to "STOP" and select "YES" again. The LCD will read "SAVE OPEN LIMIT OK?"
13. Select "YES" if the valve's open position limit is correct. The open position limit is set.
14. Turn the open stop against the drive sleeve, then back off the open stop from the drive sleeve approximately 0.5 to 1.5 turns, ensuring the stop does not contact the drive sleeve.
15. Once the limits have been set, electronically cycle the valve open and closed. While at each respective limit of travel and in the motionless condition, reconfirm that the stop does not contact the drive sleeve. To confirm, rotate the stop freely back and forth, encountering only O-ring drag. If the drive sleeve has not been loaded against the stop, secure the stop with screw to lock it in place. If the stop is loaded by the drive sleeve, the stop must be backed away further from the drive sleeve. If stop was in contact with the drive sleeve repeat Step 15 from the beginning.
    There must be no load on the drive sleeve before adjusting stops.
16. When "SET CLOSE POSITION LIMIT?" and "SET OPEN POSITION LIMIT?" are both completed, set calibration if desired.

Figure 2.1 – Electrical operation

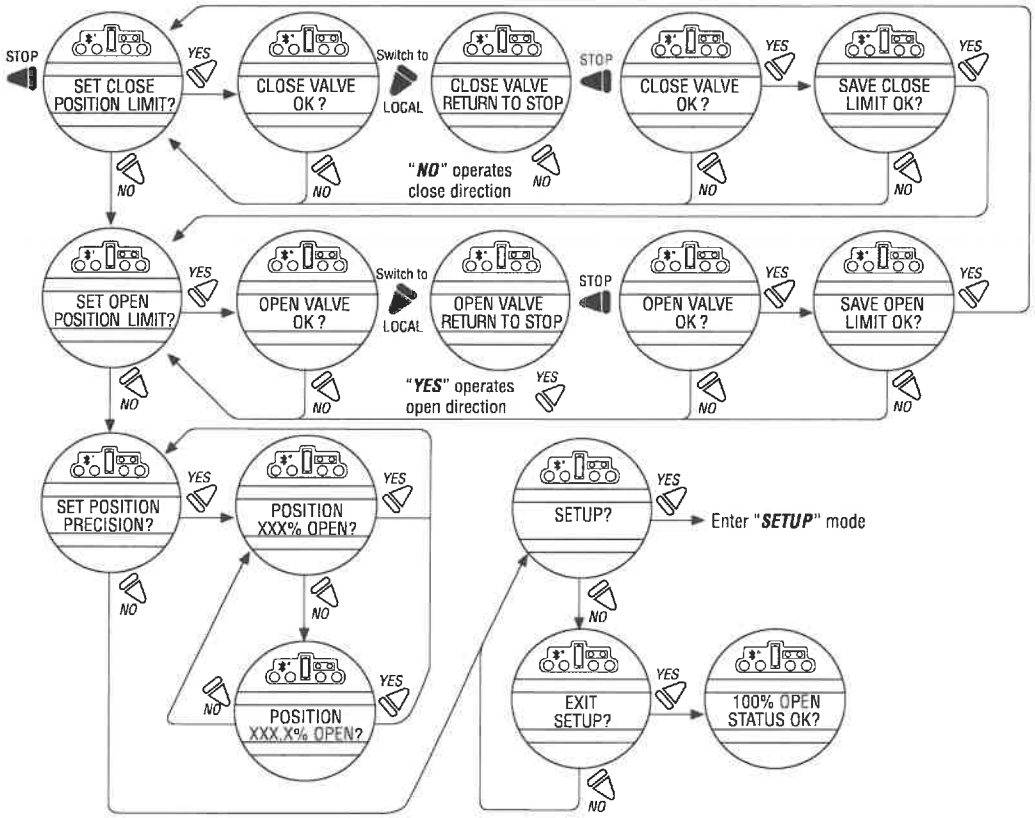

The position settings are now complete. The actuator will now function as ordered, and may be run electrically to inspect for correct operation.

Once initial setup has been completed, the "SETUP?" message is displayed. Select "YES" to continue with additional setup options or "NO" to exit the setup menu. Confirm exit setup with "NO" when "EXIT SETUP" message is displayed.

2.1.2 Handwheel Operation Feature

To set the position limits manually, from a virgin startup the "SET CLOSE POSITION LIMIT?" message will be displayed once the setup language has been selected.

NOTE: Refer to Figure 2.2 – Handwheel operation as a guide during setup

⚠ **CAUTION:** Do not adjust close stop while stop is loaded. It is highly recommended that the stops be turned until they are almost removed from the housing before setting the limits. Once the limits have been set, then the stops maybe tightened. Refer to Figure 2.3.

Closed Position Limit

1. "SET CLOSE POSITION LIMIT?" is displayed on the LCD.
2. Select "YES." The "CLOSE VALVE - OK?" is displayed.
3. Depress the declutch lever, and at the same time slowly rotate the handwheel until the clutch is fully engaged. Release the lever; the clutch will be retained in the handwheel mode by spring-loaded latches.
4. Back out the close stop if needed. First loosen the screw securing the stop then move stop.

NOTE: Do not adjust open stop while stop is loaded.

5. Ensure the valve is fully closed, then move the valve in the open direction for one to two handwheel turns to allow for coasting of the motor.
6. When the valve is in the desired position, select "YES". The LCD will read "SAVE CLOSE LIMIT OK?"
7. Select "YES" if the valve's close limit position is correct. The close position limit is set.
8. Turn the close stop against the drive sleeve, then back off the close stop from the drive sleeve approximately 0.5 to 1.5 turns, ensuring the stop does not contact the drive sleeve.

⚠ **CAUTION:** Do not adjust close stop while stop is loaded. It is highly recommended that the stops be turned until they are almost removed from the housing before setting the limits. Once the limits have been set, then the stops maybe tightened. Refer to Figure 2.3.

Open Position Limit

9. "SET OPEN POSITION LIMIT?" is displayed on the LCD.
10. Select "YES." The "OPEN VALVE - OK?" is displayed.
11. Depress the declutch lever, and at the same time slowly rotate the handwheel until the clutch is fully engaged. Release the lever; the clutch will be retained in the handwheel mode by spring-loaded latches.
12. Back out the open stop if needed. First loosen the screw securing the stop then move stop.

NOTE: Do not adjust open stop while stop is loaded.

13. Ensure the valve is fully open, then move the valve in the close direction for one to two handwheel turns to allow for coasting of the motor.
14. When the valve is in the desired position, select "YES" again. The LCD will read "SAVE OPEN LIMIT OK?"
15. Select "YES" if the valve's open position limit is correct. The open position limit is set.
16. Turn the open stop against the drive sleeve, then back off the open stop from the drive sleeve approximately 0.5 to 1.5 turns, ensuring the stop does not contact the drive sleeve.
17. Once the limits have been set, electronically cycle the valve open and closed. While at each respective limit of travel and in the stopped condition, reconfirm that the stop does not contact the drive sleeve. To confirm, rotate the stop freely back and forth, encountering only O-ring drag. If the drive sleeve has not been loaded against the stop, secure the stop with screw to lock it in place. If the stop is loaded by the drive sleeve, the stop must be backed away further from the drive sleeve. The drive sleeve must be backed off the stop before adjusting stops. There must be no load on the drive sleeve before adjusting stops. If stop was in contact with the drive sleeve repeat Step 17 from the beginning.
18. When "SET CLOSE POSITION LIMIT?" and "SET OPEN POSITION LIMIT?" are both completed, set calibration if desired.

Figure 2.2 – Handwheel operation

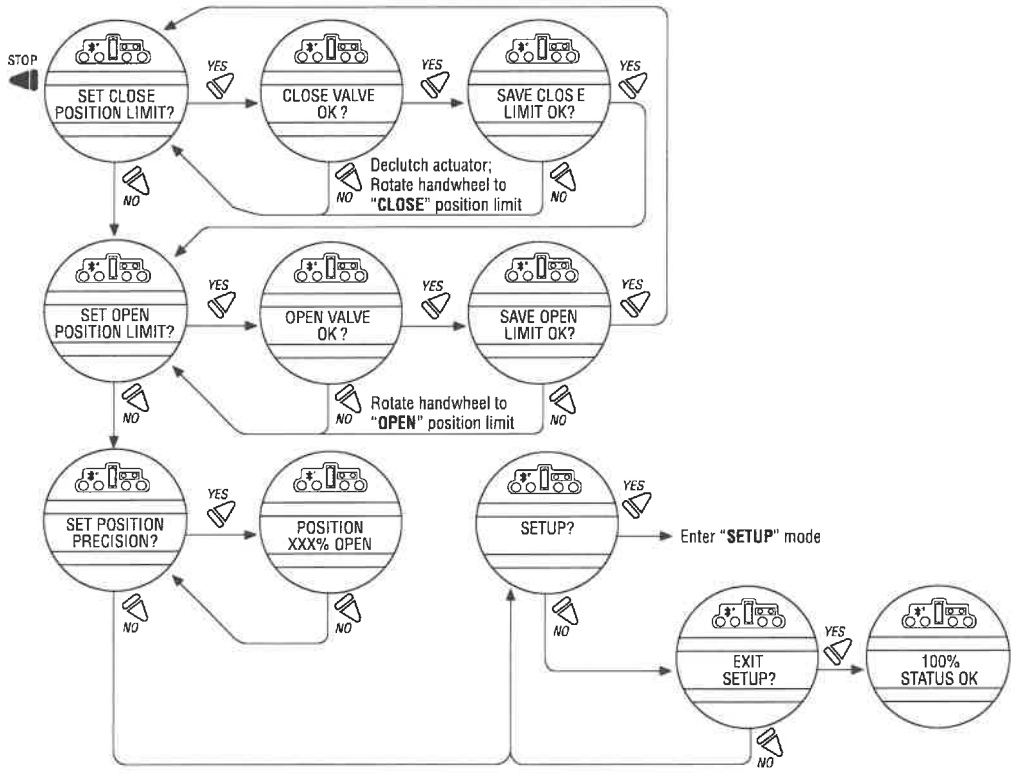

The position settings are now complete. The actuator will now function as ordered, and may be run electrically to inspect for correct operation.

Once initial setup has been completed, the "SETUP?" message is displayed. Select "YES" to continue with additional setup options or "NO" to exit the setup menu. Confirm exit setup with "NO" when "EXIT SETUP" message is displayed.

Figure 2.3 – QX travel stops

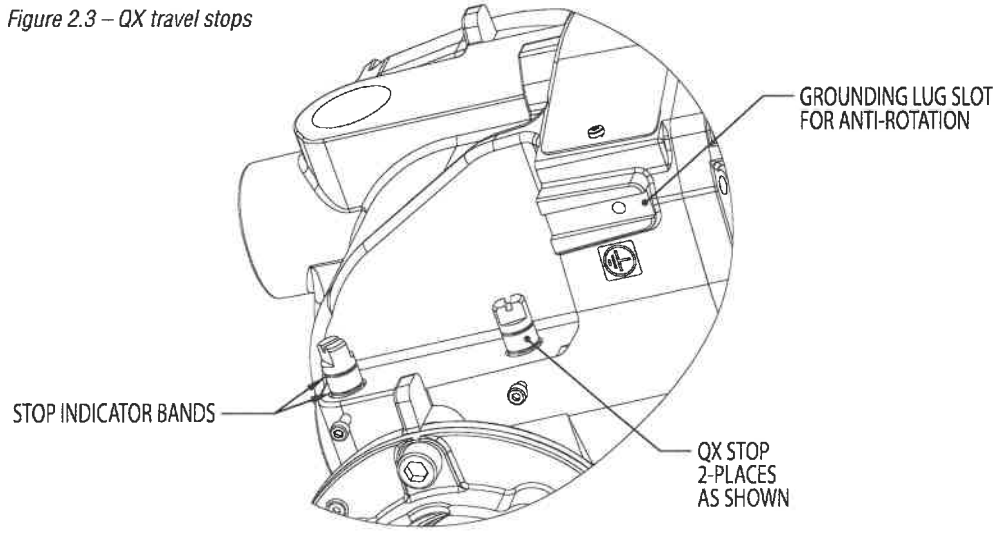

2.1.3 Entering the Setup Mode

To access the Setup Mode after initial setup has been exited, use these steps:

1. Place the red selector knob in the "STOP" position.
2. Within 10 seconds, place the black control knob in the "YES" position, then the "NO" position, then again in the "YES" position (in quick succession—approximately one to two seconds).
3. The message "SETUP?" will appear in the LCD display for 10 seconds. Select "YES". If no setup action is taken within 10 seconds, the unit will reset.
4. Use the black control knob to answer "YES" or "NO" to the questions appearing in the display.

2.2 DDC Option

The following instructions assume that all DDC option parameters are set with the exception of the address.

1. After setting position limits, remain in the "SETUP" mode. If not in the "SETUP" mode, enter the "SETUP" mode as detailed in Section 2.1.3, Entering the Setup Mode.
2. When LCD reads "CHANGE SETTINGS?", select "YES."
3. The LCD will display the "CHANGE SETTINGS" mode menu items. Select "NO" until screen displays "CHANGE DDC?" Select "YES." LCD will display DDC menu items.
4. Select "YES" for each menu item until "DDC ADDRESS OK?" appears. Select "NO."
5. Enter an address from 1 to 250 by toggling "NO" until the correct address is displayed. User may select to hold the knob in the "NO" direction and the number will automatically increment by one until the preferred address is reached.

NOTE: The DDC address does not have to be set to exit the setup.

⚠ **CAUTION:** The network address must be entered in accordance with the user address assignment sheet. This assignment sheet should correspond to the contract specifications. The same address must not be used anywhere else in the same network. The DDC address does not have to be set to exit the setup.

2.3 Check the Settings

1. Operate the valve to the fully "CLOSE" position. Verify that the "CLOSE" (default GREEN) LED illuminates just as the travel limit is reached, and the valve position is displayed as "0% OPEN."
2. Operate the valve to the fully "OPEN" position. Verify that the "OPEN" (default RED) LED illuminates just as the travel limit is reached, and the valve position is displayed as "100% OPEN."

3 Installation and Operation

3.1 Preparing the Stem Nut

The QX has two (2) basic base designs:

- Torque-only (90°) operation
- Multi-turn operation (up to 20 multi-turn rotations - 7200° total)

3.1.1 Torque Applications

Standard B4/B4E Base

The standard QX actuator base is the stem nut for torque-only. It includes a mounting plate and steel torque nut, which may be machined to fit a valve or gearbox. A B4E torque nut can be provided and may be installed to allow for extended stem acceptance.

Table 3.1 – Available QX Flanges

		QX-1	QX-2	QX-3	QX-4	QX-5
Flange 1	ISO 5210	F05/F07	F07	F10	N/A	N/A
	MSS SP-102	FA05/07	FA07	FA10	N/A	N/A
Flange 2	ISO 5210	F10	F10	F12 (OPT) F14 (STD)	F12 (OPT) F14 (STD)	F14
	MSS SP-102	FA10 (STD)	FA10 (STD)	FA12 (OPT) FA14 (STD)	FA12 (OPT) FA14 (STD)	FA14 (STD)

Disassembly – Flange 1

1. Remove base plate mounting screws and small base plate.
2. Remove the two torque nut mounting screws and remove the torque nut.
3. Machine the torque nut to suit the valve stem or gearbox input shaft. Ensure sufficient clearance for a smooth, sliding fit.

Disassembly – Flange 2

1. Remove the two torque nut mounting screws and remove the torque nut.
2. Machine the torque nut to suit the valve stem or gearbox input shaft. Ensure sufficient clearance for a smooth, sliding fit.

Figure 3.1 - Top view - Stem nut with standard keyway position

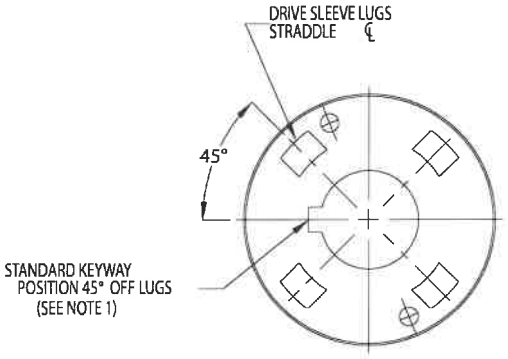

Reassembly

1. Clean the torque nut thoroughly and lightly grease.
2. Replace the torque nut in the drive sleeve. Ensure the torque nut meshes with the drive lugs.
3. Reinstall the torque nut mounting screws.

Figure 3.2 – Exploded view of QX bases

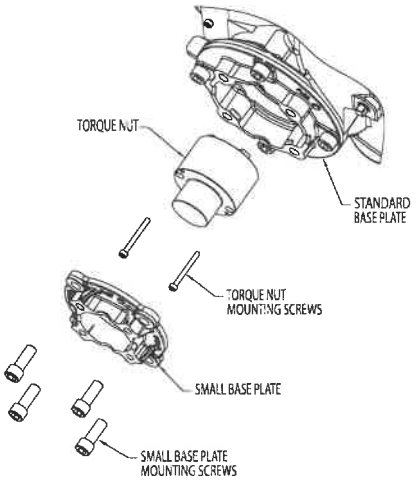

QX-1 F/FA05 & F/FA07, QX-2 F/FA07 Base,
QX-3 F/FA10 Base

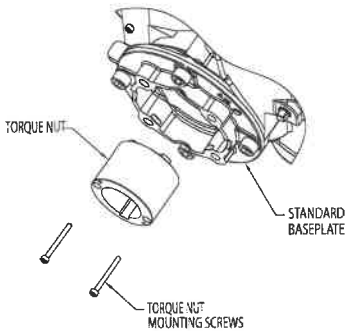

QX-1, -2 F/FA10 Base
QX-3, -4, -5 F/FA12 & 14 Base

3.2 Mechanical Installation onto Valve or Gearbox

Before installing the actuator onto a valve or gearbox, check the following to ease installation:

- Verify that mounting flange is suited dimensionally to mate with the actuator base. Ensure that it is perpendicular to the valve stem.
- Ensure the stem nut mates with the valve stem or input shaft. Keyed or splined shafts should exhibit a smooth, sliding fit with the key installed.
- Ensure there is adequate engagement of the stem nut with the valve stem or input shaft when mounted. Generally, the minimum length of engagement is 1.5 times the diameter of the stem.
- Ensure that the valve stem is not too long such that it bottoms out on the QX drive sleeve.
- Verify that mounting studs or bolts are the correct length to suit the thickness of the mounting plate.
- Verify hardware specifications for English style:
  - Socket head cap screw per ASTM A 574 and ANSI 18.3.
  - Hex head cap screw per SAE J429 Grade 5.
  - Verify hardware specifications for metric style: hex and socket head cap screws per Property Class 12.9.
- Clean and lubricate the valve stem or input shaft.
- Ensure adequate lifting facilities and slings are available at the installation site.

NOTE: Do not use the handwheel to lift the actuator.

3.3 Electrical Connections

Verify that the supply voltage details on the nameplate are correct for this installation. Setup is non-intrusive; therefore, remove only the terminal cover to make electrical connections and to commission the actuator.

WARNING: The removal of any other covers without Limitorque's approval will void the warranty. Limitorque will not accept responsibility for any damage or deterioration that may occur as a result of cover removal.

3.3.1 Removing Terminal Cover

Remove the terminal cover as follows:

1. Remove the four cover screws using a 6 mm hexagonal wrench.
2. Remove the cover. XP units have long-spigoted covers and two tapped holes 180° apart. If the XP cover is difficult to remove, fit two of the cover screws into the tapped holes in the cover flange and jack out the cover. Take care to turn the screws by equal increments. Do not lever the cover off with a screwdriver, or similar object, since this may damage the flamepath on an explosionproof unit or the O-ring seal and seating face.

3.3.2 Terminal Compartment Documents

The OEM and user installation kits, wiring diagram, and test report are contained in the terminal compartment or with the actuator. Do not place them in the terminal compartment when the electrical connections have been completed.

NOTE: This instruction does not apply to valve manufacturers or similar installers of the actuator onto a valve prior to shipping to site. It is important that these items are available at the final destination site.

3.3.3 Sealing Cable/Conduit Entries

The sealing of cables and conduit entries should be done in accordance with National Standards or the Regulatory Authorities that have certified the actuators. This is particularly true for units that are certified for use in hazardous areas where the method of sealing must be to an approved standard and cable glands, reducers, plugs, and adapters must be approved and separately certified. All conduit entries should be sealed against the climatic conditions prevailing on-site, especially if temporary submersion is possible. All unused conduit entries should be sealed with threaded metal plugs. Plastic plugs are installed by Limitorque for shipping only and must not be used as permanent seals.

3.3.4 Recommended Terminal Connections

Power Terminals

Ring tongue connectors used on the power terminals should comply with the dimensions shown in Figure 3.3. For Additional information, consult terminal manufacturer.

Table 3.2 details the allowable voltage and current parameters for the terminal block power terminals. Preload the M5 screws to 1.6-3.2 N m (1.2-2.33 ft-lb).

Control Terminals

Ring tongue connectors used on the control terminals should comply with the dimensions shown in Figure 3.5. For additional information, consult terminal manufacturer. Preload the M3 screws to 0.33-0.66 N m (0.25-0.50 ft-lb).

NOTE: Alternative manufacturers may be substituted only if dimensions are in accordance with Figure 3.5.

NOTE: The use of spade terminals is not recommended for secure electrical connections.

Figure 3.3 – Power terminal connector size limitations - all dimensions are in mm

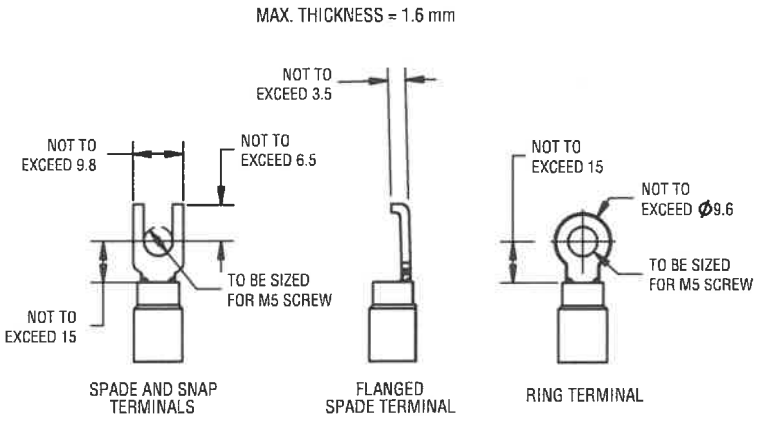

Table 3.2 lists the maximum allowable voltage and current parameters for the terminal block control terminals.

Table 3.2 – Terminal block rating; power terminals

Description	L1	L2	L3
STD Rating	30 AMP	20 AMP	15 AMP
	8 Awg/10 mm²	10 Awg/6 mm²	14 Awg/2.5 mm²
	600 VAC	RMS	150 VDC
Increased Safety Rating	27 AMP	18 AMP	13.5 AMP
	8 Awg/10 mm²	10 Awg/6 mm²	14 Awg/2.5 mm²
	500 VAC	RMS	150 VDC

Figure 3.4 - Terminal Block

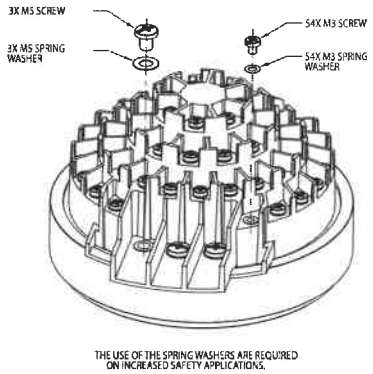

Figure 3.5– Control terminal connector size limitations - all dimensions are in mm

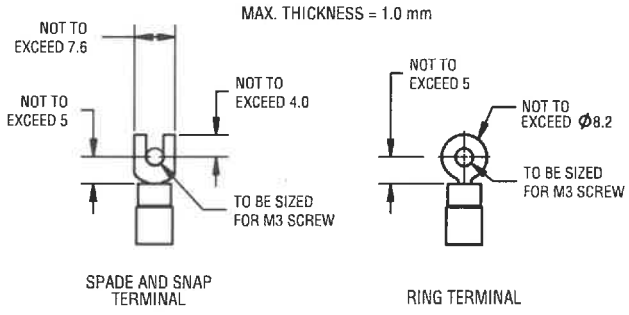

NOTE: Limitorque recommends the use of the following connector for optimum results: Thomas and Betts #RZ22-6.

NOTE: Alternative manufacturers may be substituted only if the dimensions are in accordance with Figure 3.5.

Table 3.3 – Terminal block rating; control terminals

Low Voltage Row	STD Rating	Increased Safety Rating
1 points 1-16, 50 Volt	0.5 AMP AC RMS	0.45 AMP AC RMS
2 points 17-35, 125 Volt	0.5 AMP AC RMS	0.45 AMP AC RMS
3 and 4 points 36-54, 250 Volt	5 AMP AC RMS	4.5 AMP AC RMS

3.3.5 Termination of Cables

All terminations should be made with insulated ring terminals using the appropriate crimping tool. See Figures 3.3 and 3.4 for power terminal connection recommendations. See Figure 3.5 and Tables 3.2 and 3.3 for control terminal connection recommendations.

3.3.6 Cable Connections

See Figures 3.3 and 3.5 for connection information.

1. Connect the main power supply cables, including the earth/ground wire using the M5 screws provided.
2. Attach the earth/ground wire to the separate screw on the inside of the terminal compartment.
3. Use the M3 screws installed in the terminal block to connect the control cables in accordance with the wiring diagram and the project specification.
4. Ensure that all connections are tight, including any spare termination screws that have not been used.

NOTE: A "Customer Connection(s) Diagram" sticker is attached to the interior of the terminal compartment cover. This may be removed and user termination numbers inscribed adjacent to Limitorque's terminal block numbers for field connection reference. The diagram may also be used to assist in locating the terminal block positions. Service and factory contacts are contained on the sticker.

Certification is based on the use of appropriately rated wire for the application. Installation shall be in accordance with the current issue of the applicable national and or local electric code or regulations.

Table 3.4 – Required ratings for external wires

Up to	Use wire rated at least
40°C to 55°C Ambient	60°C
56°C to 70°C Ambient[1]	75°C

Note 1: Refer to unit nameplate.

3.3.7 Network Installations

The Limitorque QX offers a number of network options: DDC-Modbus, Foundation Fieldbus H1, Profibus DP_V1, Profibus PA, and DeviceNet.

Ensure that the network cable type is Belden 3074F, Belden 3105, Belden 9841 or another cable that is within 5% of the following specifications.

- Nominal impedance: 120 ohms @ 1 MHz
- Line to shield capacitance: 23.0 pF/ft (75.5 pF/m)
- Line to line capacitance: 12.8 pF/ft (42.0 pF/m)

Using other cables may result in decrease of internodal distance and/or an increase in communication error.

Particular care should be taken when terminating twisted-pair shielded cables in a control network. Avoid nicks, cuts, or abrasions in the insulation of data communication cables, since this may result in inadvertent ground connection. Also, excess cable should be cut, not coiled or looped, to prevent noise induction into the network.

Figure 3.6 – View of terminal block

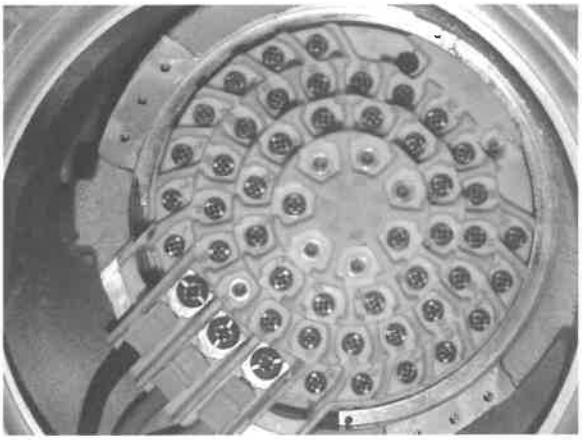

Figure 3.7 – Standard wiring diagram - three phase shown

NOTE: Most current wiring diagram is shipped within the terminal compartment of the QX.

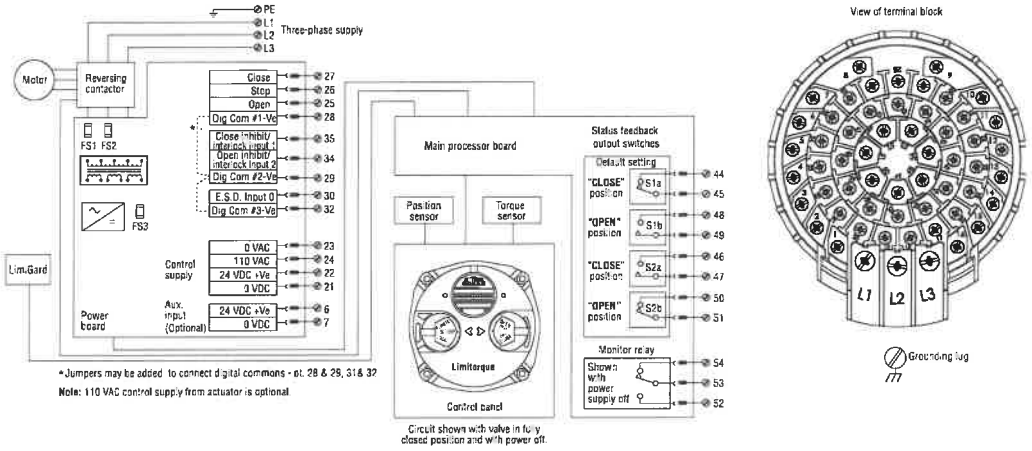

Cable Preparation

Prepare the network cable for connection to the QX actuator terminal block as illustrated in Figures 3.8 through 3.11.

⚠ **CAUTION:** Strip stranded conductors carefully; do not damage the strands. This will weaken the conductor. Do not nick conductors when stripping away the insulation. Nicking stresses the conductor and can cause the conductor to break. This type of damage may not be apparent and failure can occur later without warning.

1. Remove 2 to 3 in. (5 to 8 cm) of the outer plastic jacket as shown in Figure 3.8. Do not cut or nick the drain wire or the insulated conductors.

Figure 3.8 – Removing outer plastic jacket

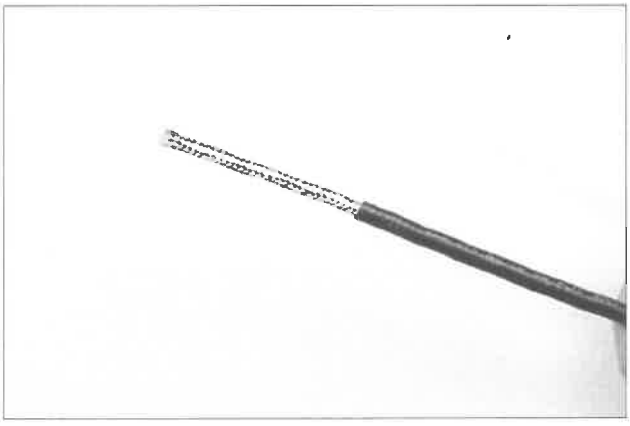

2. Separate the cable parts. Unbraid the braided shield and peel back the foil shield to the same point where the outer jacket was removed as shown in Figure 3.9.
3. Cut away the braided shield and the foil shield. Strip the insulation from the conductors approximately ½ inch (1 cm) as shown in Figure 3.10.
4. Apply heat shrink tubing to insulate the drain wire and to provide stress relief to the cable.
5. Install ring tongue connectors as shown in Figure 3.11.

⚠ **CAUTION:** Do not melt the insulation.

6. Connect the network cables to the QX actuator terminal block per Table 3.3 and appropriate wiring diagram. Table 3.5 details a connection for the loop topology.

Figure 3.9 – Separating cable parts

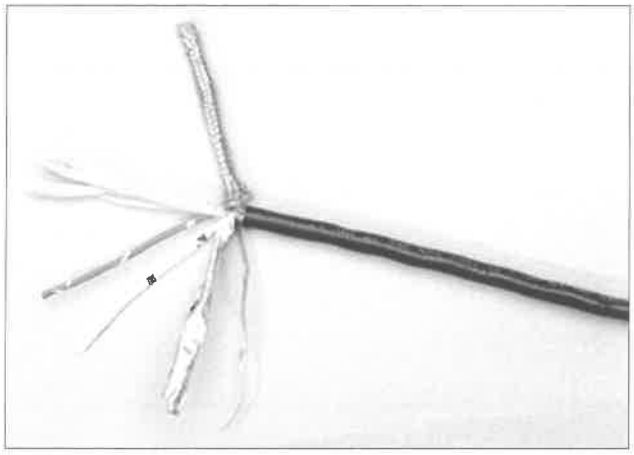

Figure 3.10 – Stripping conductors and applying heat shrink tubing

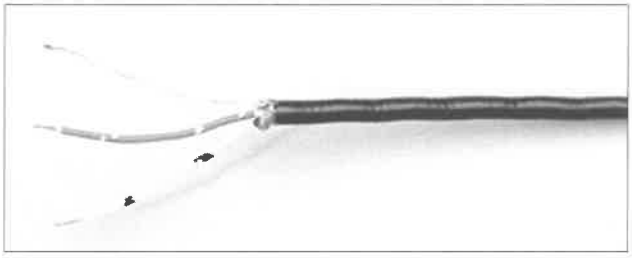

Figure 3.11 – Ring tongue connectors



Table 3.5– Loop topology connections

Terminal Block Number	DDC
4	DATA-A1* (-)
5	DATA-A1 (+)
14	DATA-A2* (-)
13	DATA-A2 (+)
3	Surge Protection

In terms of voltage, DATA is negative with respect to DATA*.

NOTE: Surge protection must be grounded to be effective.

NOTE: Ground each segment of the cabling at only one point to prevent ground loops, which can affect system performance. Verify the actuator is properly grounded.

Limitorque defines an effective local earth ground as the M3 taps on the housing next to the terminal block. See figure 3.14.

NOTE: Safety ground may not be disturbed.

NOTE: Shielding is not sufficient to prevent induction of stray voltages onto signal leads from the power lines.

A network wiring diagram for a loop is shown in Figure 3.13.

After installation is complete and prior to operation, inspect the network cable and its connection to each field unit for the following:

There should not be:

- Nicks in the insulation—this can cause a short to the grounded shield.
- Cut strands in a stranded conductor—this can cause a poor connection and eventually an open circuit.
- Cable armor shorted to the cable shield/drain wire—this may not be at ground potential and could be subject to lightning surges.
- Shield/drain wire grounded at more than one end of each cable segment (the section between each adjacent actuator on the loop). This will avoid ground loop problems.
- Ground/earth connection except at true ground potential and effective at all times.

3.3.8 Foundation Fieldbus Installation

Ensure that the Foundation Fieldbus cable type is Belden 3076F, or another cable that is within 5% of the following specifications.

- Characteristic impedance: 100 ohms @ 31.25 kHz
- Resistance, each wire: 7.32 ohms/1000 ft
- Attenuation: 0.914 dB/1000 ft @ 39 kHz
- Capacitative Unbalance: 3.6 pF/ft

Using other cables may result in decrease of internodal distance and/or an increase in communication error.

Particular care should be taken when terminating twisted-pair shielded cables in a FF control network. Avoid nicks, cuts, or abrasions in the insulation of data communication cables, since this may result in inadvertent ground connection. Also, excess cable should be cut, not coiled or looped, to prevent noise induction into the network.

Cable Preparation
Prepare the network cable for connection to the QX actuator terminal block as follows in Figure 3.8 through 3.11. Table 3.6 details connections for Foundation Fieldbus.

Table 3.6 – Foundation Fieldbus connections

Terminal Block Number	FF Function
4	DATA (-)
5	DATA (+)

The shield must be connected to ground or earth at only one place. The cable shield is generally grounded at the power conditioner.

Reference the Fieldbus Foundation Application Guide 31.25 kbit/s Wiring and Installation guide for more information on network wiring.

⚠ **CAUTION:** Strip stranded conductors carefully; do not damage the strands. This will weaken the conductor. Do not nick conductors when stripping away the insulation. Nicking stresses the conductor and can cause the conductor to break. This type of damage may not be apparent and failure can occur later without warning.

3.3.9 Network Wiring – Profibus DP/PA Installation

Profibus DP is based on RS 485 communication. The standard EN 50170 specifies the cable for use with Profibus DP.

The following specifications need to be fulfilled by the Profibus cable:

Table 3.7 – Profibus cable specifications

Parameter	Type – Profibus DP
Impedance	135 to 165 ohm/3 to 20 MHz
Capacity	< 30 pF/m
Resistance	< 110 ohm/km
Wire gauge	> 0.64 mm
Conductor area	> 0.34 mm²

The Profibus DP cable is a shielded twisted pair cable.

In general, there are two different types of cables available. The most commonly used cable has solid wire for the Profibus line. When there is a need for more flexiblity (bending) and higher environmental resistance, a cable with stranded wire for the Profibus line and special jackets shall be used. Limitorque recommends the use of:

- Belden 3079A Specifications, 22 AWG, shielded, solid two conductor

Key Specifications
- Capacitance/ft = 8.5 pF
- Nominal Impedance (ohms) – 150.0

Network Wiring - Profibus PA
Please refer to IEC 61158 & ANSI/ISA S.50.02 Part 2-1992 for network wiring guidelines. Refer to Table 3.7 for connections.

3.3.10 Network Wiring – DeviceNet

DeviceNet is a CAN-based protocol that uses five wires including a shield. Two of the conductors are used for 24 VDC power and up to 8 amps (4 amps for NEC Class 2) may be passed along the hi-way from a suitable power source. Two conductors are used for the CAN bus signals, CAN_H and CAN_L, which are usually smaller in diameter. Flowserve recommends Belden 3082A cable for connecting to a DeviceNet network. The specifications for this cable are preferred.

Table 3.8 – DeviceNet cable specifications

Belden Part No.	AWG (Stranding) dia. Inches Nom. DCR	Insulation material (color code)	Nominal O.D.	Nom Impedance (ohms)	Nominal Capacitance	Test Frequency (MHz)	Maximum Attenuation dB/100ft
3082A	2 – 15 AWG (19 x 28) 3.6 ohm/1000 ft 11.8 ohm/km	Power pair (Black/Red)	12.2 mm	120	12.0 pF/ft	0.125 0.5 1	0.13 0.25 1.36
	2 – 18 AWG (19 x 30) 6.9 ohm/1000 ft 22.7 ohm/km	Data pair (Blue/White)					
3084A	2 – 22 AWG (19 x 34) 17.5 ohm/1000 ft 57.4 ohm/km	Power pair (Black/Red)	7.2 mm	120	12.0 pF/ft	0.125 0.5 1	0.29 0.50 1.70
	2 – 18 AWG (19 x 36) 28.0 ohm/1000 ft 91.9 ohm/km	Data pair (Blue/White)					

Please refer to Table 3.5 for connections.

3.3.11 Replacing Terminal Cover

Verify that the O-ring seal and spigot joint are clean and in good condition. Lightly coat these items with mineral-based lubricant before replacing the terminal cover and four retaining screws.

3.3.12 External Earth/Ground Connections

In order to help meet the local electric codes of the installation, one external connection point is provided on the main gear housing for the attachment of earth/ground cables. See Figure 3.14. This is in addition to the ground connection inside the terminal compartment.

3.4 Terminal Block Shield Installation

1. Remove terminal block cover.
2. Use Qty of 2 screws from terminal block or from end users bag to attach shield.
3. Remount terminal block cover.

Figure 3.12 – Terminal Block Shield

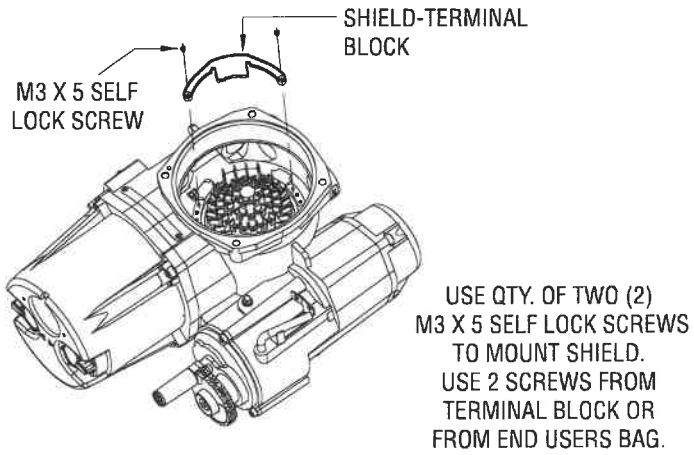

3.5 Commissioning the Actuator

Before attempting to commission the actuator, verify that the actuator is installed correctly on the valve and main power is "ON."

After making the initial electrical connections detailed in Section 3.3, Electrical Connections, the QX actuator may be commissioned without removing any covers. No special tools are required. Configuration is accomplished through the use of the LCD and the control knobs mounted on the control panel.

For positioning the actuator:

1. Place the red knob in the "LOCAL" position.
2. Move the black knob to the "OPEN" or "CLOSE" position.

For configuring the actuator:

1. Place the red knob in the "STOP" position.
2. Move the black knob to the "YES" or "NO" position and release to answer questions appearing on the LCD display.

The OPEN and CLOSE position limits must be set after the actuator has been mounted on the valve. See Section 3.5.4, Setting Position Limits. All other actuator parameters are factory-set either in accordance with a Limitorque standard set of default values (see Section 3.5.1, Default Configuration Set) or the requirements specified with the purchase order. Reconfirm these preconfigured settings prior to placing the actuator into service since the requirements of the application may have changed after the manufacture of the actuator. See Section 3.5.2, View the Existing Settings.

3.5.1 Default Configuration Set

Unless otherwise specified, actuators are shipped with the following configuration:

- When Open stopped by position limit; Open seating (position)
- When Close stopped by position limit; Close seating (position)
- Maintained local control; Mode (maintained)
- Clockwise to close; Close direction (CW)
- ESD – User configurable inputs; default is "OFF"
- Inhibits on; Inhibit status (Default = OFF)
- Remote control – three-wire maintained
- Password – 100

Figure 3.13 – User network connection for loop topology/ Typical for all two-wire network protocols

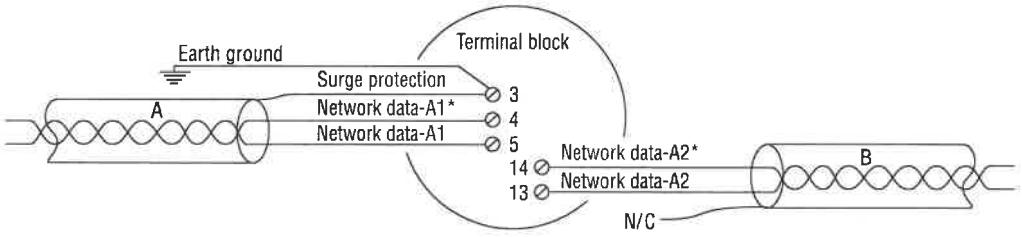

Figure 3.14 – External earth/ground connection – housing

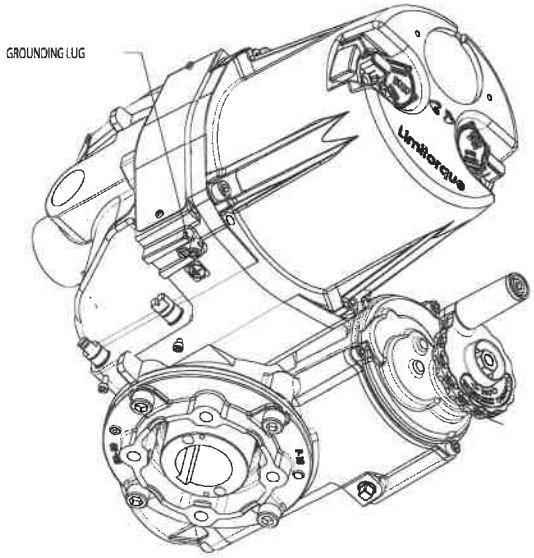

Table 3.9 – Default configurations

Modutronic Option Proportional band – 15% Deadband – 2% Polarity – 20 mA = Open Action on loss of signal = Close	**Modbus RTU protocol** 9600 baud Analog scale = 0-100 Proportional band – 15% Deadband – 2% Offset – 0 mA
FF Option and PB Option Analog scale = 0-100 Proportional band – 15% Deadband – 2%	

If the default configuration is acceptable, no further configuring is necessary. If any default setting needs to be changed, see Section 4, Customizing the Actuator.

3.5.2 View the Existing Settings

All the existing setup data may be viewed on the LCD display by following a simple step-by-step dialog that may be selected in the following languages: English (default), Spanish, French, German, Italian, Portuguese, Russian, Malay, Mandarin, Katakana, and Turkish.

1. Enter the "SETUP" mode as detailed in Section 3.5.3, Entering the Setup Mode.
2. Select the dialog language. Toggle "NO" to scan the language options. Select "YES" when the desired language appears on the LCD.
3. Select "NO" to the menu selections on LCD display and select "YES" when "VIEW SETTINGS" appears.
4. Answer "YES" or "NO" at the appropriate prompts to scan through the series of displays. Each display shows the state or value of the existing settings. See Figure 3.15.

NOTE: The "VIEW SETTINGS?" mode can be accessed without entering a password, but no changes to the settings can be made in this mode.

3.5.3 Entering the Setup Mode

To customize the actuator, view settings, or view diagnostics, the user must enter the "SETUP" mode. A three-digit password is required to customize the actuator. All actuators are supplied with the same default password (100). See Sections 4.2 and 4.3, Password Entry and New Password for entering and changing password. Main power must be applied to execute the setup procedure. It is recommended that the actuator be mounted to the valve before commissioning the actuator.

Enter the "SETUP" mode as follows:

1. Place the red knob in the "STOP" position.
2. Within 10 seconds, place the black control knob in the "YES" position, then the "NO" position, then again in the "YES" position (in quick succession—approximately one-two seconds).
3. The LCD will display "SETUP?" for 10 seconds. If no action is taken within the 10 seconds, the unit will return to "STATUS OK."
4. Using the black knob, answer "YES" or "NO" to the questions appearing on the LCD display.

NOTE: While in the "SETUP" mode, if there is a lapse of 15 minutes from last action, the unit will return to the "SETUP?" display. Any changes that have been made will be stored.

5. When configuration is complete, answer "YES" to "EXIT SETUP?" or move the red knob from "STOP" to "LOCAL" or "REMOTE."

After exiting the "SETUP" mode, all settings will automatically be saved to a non-volatile memory and retained, even when power is removed from the actuator. However, if power is removed from the unit while the unit is in "SETUP" mode, customization changes will be lost.

Figure 3.15 – View settings

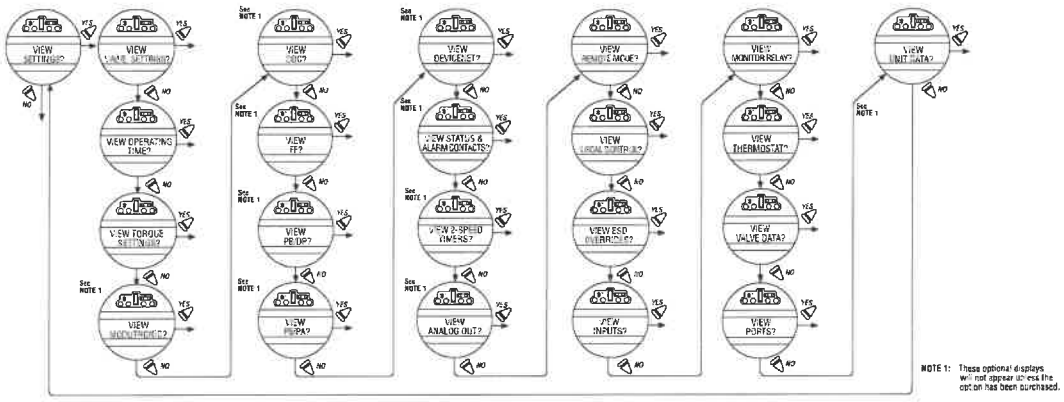

3.5.4 Setting Position Limits

This section will advise how to configure end-of-travel limits.

The actuator's position limits may be set by manual operation or electrical operation.

WARNING: If the actuator will not move after setting the limits, the limits have been set incorrectly.

Set Close Position Limit (Handwheel Operation)

1. Enter the "SETUP" mode as detailed in Section 2.1.3, Entering the Setup Mode.
2. Enter "POSITION SETUP?" routine.
3. From the "SET CLOSE POSITION LIMIT?" display, select "YES." "CLOSE VALVE OK?" will be displayed on the LCD.
4. Engage manual override as detailed in Section 3.6.1, Manual Operation.
5. Ensure that the valve is fully closed.
6. Move the valve in the open direction for one handwheel turn to allow for coasting of the motor.
7. When the valve is positioned correctly, select "YES" again. The LCD will display "SAVE CLOSE LIMIT OK?"
8. Select "YES."

The close position limit is now calibrated. Check the position limit setting as follows:

1. Move the valve in the open direction. The close lamp should extinguish with approximately one turn of the handwheel.
2. Move the valve back in the close direction and check that the close lamp illuminates just before the full close position is reached (approximately ½ to 1 turn).
3. Select "YES" at the "SET OPEN POSITION LIMIT?" prompt.
4. Set Position Precision? The QX permits position to be reported to the User in either default mode of XXX% OPEN, or single precision mode of XXX.X% OPEN. This may be preferred in Modulating or other positioning applications such as network move-to, analog fail move-to, communication loss move-to, or ESD move-to.

If the calibration requires adjustment:

1. Select "NO" at the "SET OPEN POSITION LIMIT?" prompt.
2. Repeat the "SET CLOSE POSITION LIMIT?" routine.

NOTE: The green LED is the default setting for indicating the (CLOSE) position.

Set Open Position Limit (Handwheel Operation)

1. From the "SET OPEN POSITION LIMIT?" display, select "YES." "OPEN VALVE OK?" will be displayed on the LCD.
2. Engage manual override as detailed in Section 3.6.1, Manual Operation.
3. Ensure that the valve is fully open.
4. Move the valve in the close direction for one handwheel turn to allow for coasting of the motor.
5. When the valve is positioned correctly, select "YES" again. The LCD will display "SAVE OPEN LIMIT OK?"
6. Select "YES."

The open position limit is now calibrated. Check the open position limit setting as follows:

1. Move the valve in the close direction. The open lamp should extinguish with approximately one turn of the handwheel.
2. Move the valve back in the open direction and check that the open lamp illuminates just before the full close position is reached (approximately ½ to 1 turn).
3. Select "YES" at the "SET OPEN POSITION LIMIT?" prompt or "NO" to exit "POSITION SETUP?" dialog.

If the calibration requires adjustment:

1. Select "NO" at the "SELECT CLOSE POSITION LIMIT?" prompt.
2. Repeat the "SELECT OPEN POSITION LIMIT?" routine.

NOTE: The red LED is the default setting for indicating the (OPEN) position.

Set Close or Open Position Limit (Electrical Operation)

1. Enter the "SETUP" mode detailed in Section 2.1.3, Entering the Setup Mode.
2. Enter "POSITION SETUP?" routine.
3. During "CLOSE VALVE - OK?" or "OPEN VALVE - OK?," move the red knob to "LOCAL" and use the "OPEN" and "CLOSE" switch.

Unit will only operate locally and only in the push-to-run configuration (Inching mode). This does not exit the startup routine—moving red selector knob back to "STOP" returns the user to the same message. This permits the valve to be placed at its travel limits and avoids the necessity to use the handwheel. The unit will run while the black knob is engaged with no stop limit when in this mode. Any previously set travel limits will be ignored.

1. Move the red knob to "LOCAL" and move the black knob in the intended direction. LCD display will read:

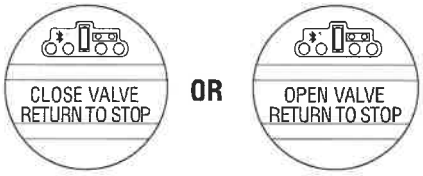

2. Once the "CLOSE" or "OPEN" valve position limit has been reached, return the red knob to "STOP" and complete setting the "CLOSE" or "OPEN" position limit. See Figure 3.16.

NOTE: Once the travel limits have been set, the actuator may be operated electrically from the remote inputs. Local maintained operation is also permitted. Check the operation of the actuator to ensure that the torque and limit settings are satisfactory. Place the selector switch in "LOCAL" and rotate the "OPEN/CLOSE" switch to operate the actuator in the "MOTOR" mode.

▲ **CAUTION:** On some valves, position limits could be set adjacent to each other, so be careful that the Close and Open limits are set sufficiently apart to permit operation. If the limits are set adjacent of each other, an error message will be displayed: "KEEP OPEN(CLOSE) LIMIT?" No further movement is permitted until the error is corrected. Should the User elect to proceed with the setting, an error will be displayed on the screen after re-booting stating "IDENTICAL LIMITS". The actuator will not move until the error is corrected.

Figure 3.16 – Position setup – electrical operation

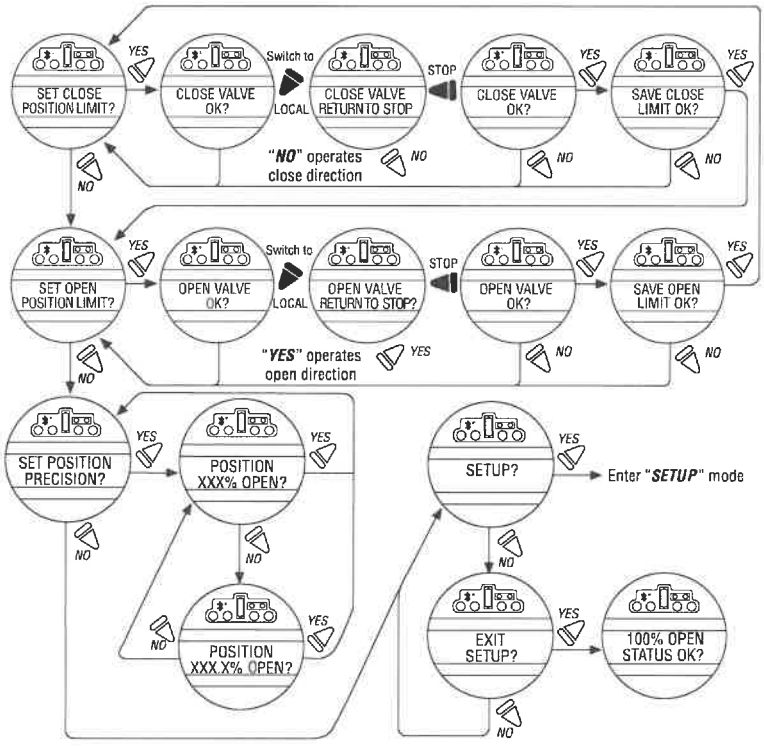

Moving the red knob from "STOP" to "LOCAL" or "REMOTE" automatically saves to non-volatile memory all the changes that have been made.

3.6 Operating the QX Actuator

3.6.1 Manual Operation

Operate the actuator with the handwheel as follows:

1. Depress the declutch lever and, at the same time, slowly rotate the handwheel until the clutch is fully engaged.
2. Release the lever and it will return to its original position. The clutch will be retained in the handwheel mode by spring-loaded latches.

Figure 3.17 – Declutch lever shows direction of engagement (QX-05 shown)

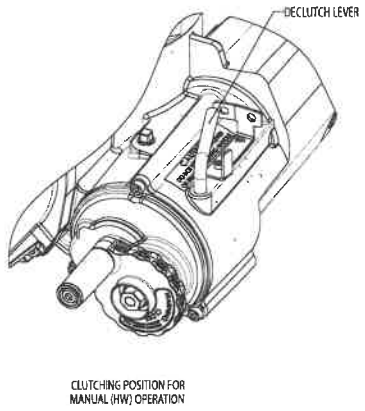

Manual operation is now possible and the actuator can only be returned to motor operation by energizing the motor. Energizing the motor will trip the spring-loaded latch and allow the clutch to disengage from the handwheel and re-engage with the gear drive. To prevent unauthorized manual operation of the actuator, the declutch lever may be padlocked in "MOTOR" mode. A ½ inch size padlock is recommended.

3.6.2 Electrical Operation

Before applying power to the actuator, check that the supply voltage details on the nameplate are correct for this installation. An incorrect supply connected to the actuator terminals could cause fuses to blow or cause permanent damage to the electrical components in the unit. Phase rotation need not be checked since all units are supplied with an Autophase Correction feature. Apply power to the actuator but do not operate the actuator without first checking that it has been set up and configured correctly for its intended application.

3.6.3 Local Control

Once the position limits have been set (see Section 3.5.4, Setting Position Limits) and the default mode is the maintained mode, the actuator can be controlled locally from the control panel.

1. Place the red selector knob in the "LOCAL" position.
2. Select "OPEN" or "CLOSE" via the black control knob.

If maintained control has been selected, the actuator will continue to run when this control knob is released. The actuator may be stopped at any time by placing the red selector knob in the "STOP" position, or the direction may be reversed or stopped using the black control knob.

If non-maintained control mode (inching) has been selected, the actuator can be inched to any intermediate position by holding the black control knob in the desired position, "OPEN" or "CLOSE," for as long as necessary. The actuator will stop when the knob is released.

3.6.4 Remote Control

Once the position limits have been set, and "REMOTE" mode is enabled:

1. Place the red selector knob in "REMOTE" to permit command control by a remote device. Local "OPEN/CLOSE" mode will be prevented.
2. Rotating the red selector knob to the "STOP" position will automatically stop the actuator regardless of the remote control signal unless ESD override has been selected. See Section 4.19, ESD (Emergency Shutdown) Overrides.

The red selector knob may be locked in or out of any of its three positions, "LOCAL/STOP/REMOTE," using a padlock. A ¼ inch padlock is recommended.

The LCD displays status and valve position. In normal operation mode, the top line displays "XXX % OPEN," while the bottom line displays "STATUS OK." Refer to Section 4.14, Status and Alarm Contacts for a list of "ALARM" or "STATUS MESSAGES." Table 3.10 details the LED indicators' default settings.

3.6.5 Local Indication

Figure 3.18 – Control panel

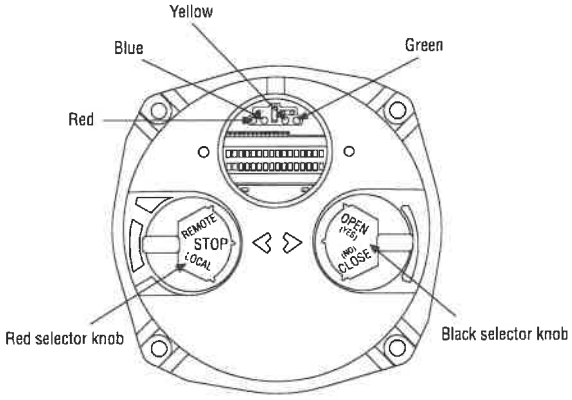

Table 3.10 – LED Indicators – default settings

LED Indicator			Operation Description
Yellow	Red	Green	
OFF	ON	OFF	Valve is fully open (Red knob in "REMOTE")
OFF	OFF	ON	Valve is fully close (Red knob in "REMOTE")
OFF	OFF	Blinking	Valve is closing (Red knob in "REMOTE")
OFF	Blinking	OFF	Valve is opening (Red knob in "REMOTE")
ON	OFF	OFF	Actuator in"REMOTE" and stopped in mid-travel
Blinking	OFF	OFF	Monitor relay alarm or actuator (red knob) in "LOCAL" or "STOP"

Red and green LED indicators can be reversed. See Section 4.18, Local Control.

NOTE: The blue LED indicator is supplied to indicate optional Bluetooth availability in the QX. This LED will light when the Bluetooth feature is recognized by an external Bluetooth enabled device.

4 Customizing the Actuator

The actuator settings can be customized; i.e., the default settings can be changed and the purchased options can be configured.

Language selection can also be customized. At the "SETUP IN ENGLISH?" prompt, select "NO" to move between the following languages: English, Spanish, German, French, Italian, Portuguese, Russian, Malay, Mandarin, Katakana, and Turkish.

4.1 Changing the Existing Settings

1. Verify main power is ON.
2. Enter the "SETUP" mode as detailed in Section 3.5.3, Entering the Setup Mode.
3. Answer "YES" to "Change Settings."
4. Enter password if required. See Section 4.2, Password Entry. To change any of the existing settings or to set the end-of-travel limits for the Open and Close positions of the valve, it may be necessary to enter a password.
5. Answer "YES" or "NO" to each of the following groups of setup data. A "YES" allows the selected setup data group menu to be displayed. A "NO" moves the user to the next setup data group. For details of each data group, see Sections 4.2 – 4.27.

   - Torque Timer
   - Valve Setup
   - Operating Time
   - Torque Setup
   - Position Setup
   - Modutronic
   - DDC (Distributed Digital Control)
   - FF (Foundation Fieldbus Control)
   - PB (Profibus Control)
   - DN (DeviceNet Control)
   - Status and Alarm Contacts
   - Two-Speed Timer
   - Analog Output
   - Remote Mode
   - Local Control
   - ESD Overrides (Emergency Shutdown)
   - Inputs
   - Monitor Relay
   - Diagnostic Reset
   - TAG Number
   - LCD Contrast
   - Password
   - Motor Thermostat
   - Valve Data
   - Port
   - Restricted Setup (Consult Factory)

6. Make changes in each setup group as desired. Each display shows the state or value of the existing settings. See Figure 4.3.

7. When configuration is complete, answer "YES" to "EXIT SETUP?" Alternatively, the "SETUP" mode may be terminated at any time by moving the red selector knob from "STOP" to "LOCAL" or "REMOTE." All the changes made so far will automatically be saved.

NOTE: Once you exit this mode and enter either the "VIEW SETTINGS?" mode or "VIEW DIAGNOSTICS?" mode, the password will need to be entered again to gain access to the "CHANGE SETTINGS?" mode in order to make further changes.

Figure 4.1 – Entering the setup mode

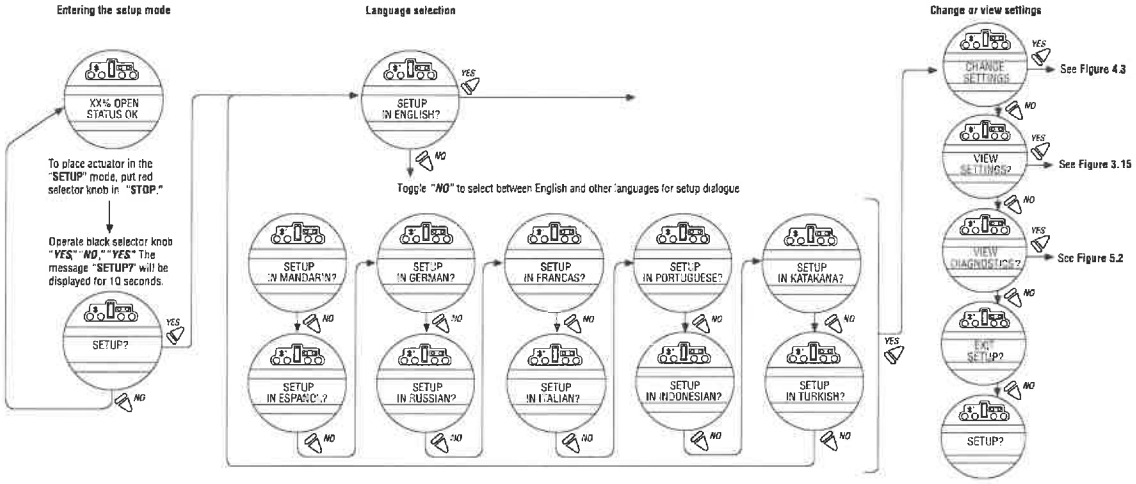

Figure 4.2 – Main menu selections

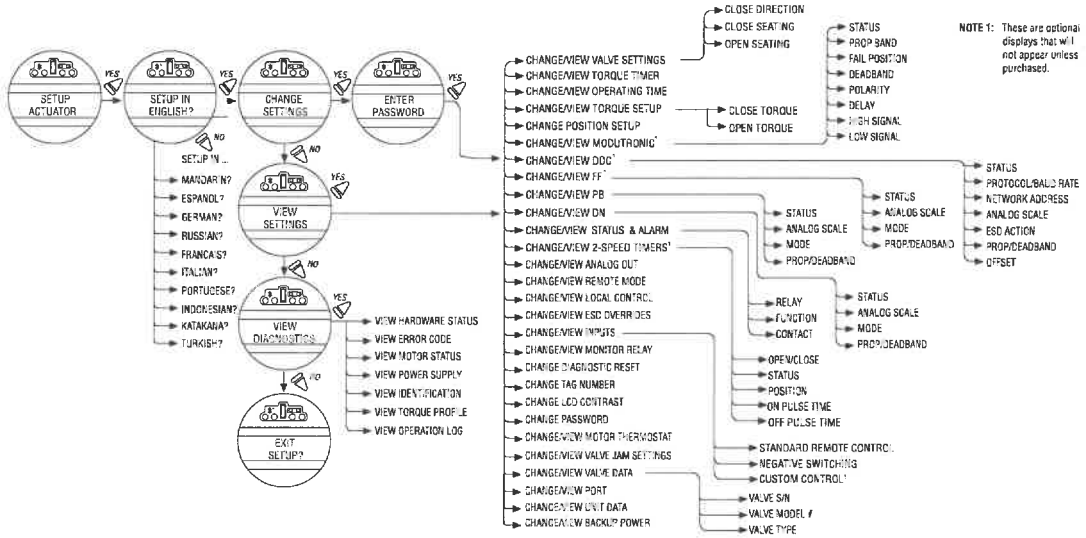

Figure 4.3 – Changing settings

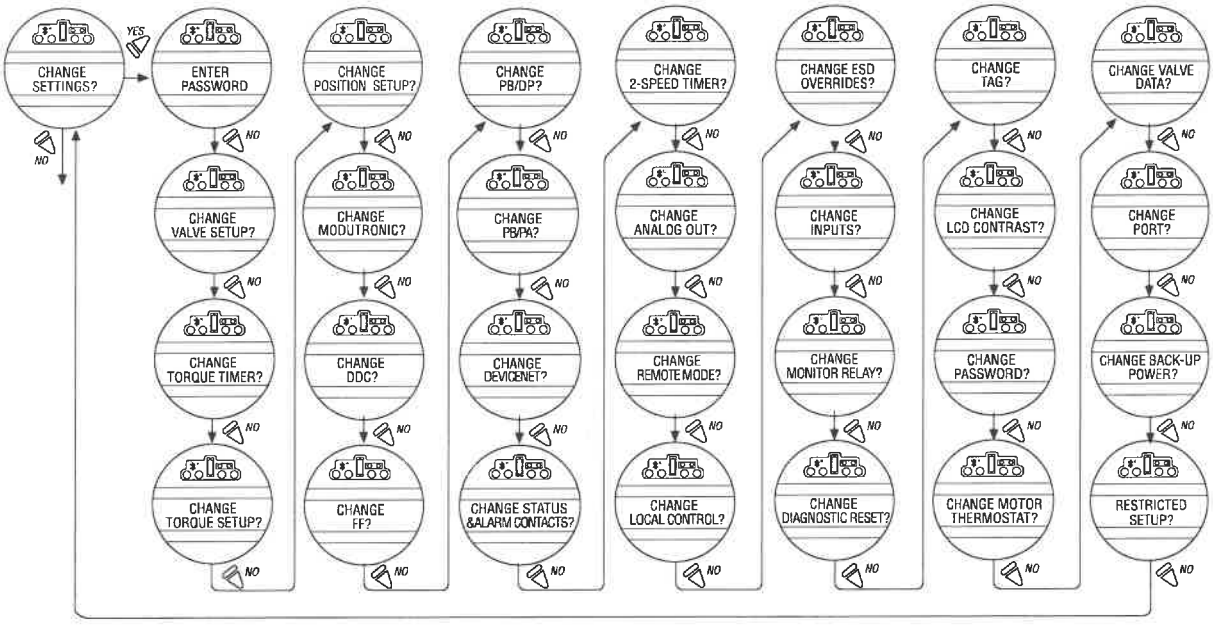

NOTE: See topic list for appropriate page for each setting.

4.2 Password Entry

Default = 100

Unauthorized entry to the "CHANGE SETTINGS?" mode is prevented by a password protection feature. If password protection is not required, the password may be set to "000." The user will not be prompted to enter a password when the password is set to "000."

1. Enter the password digit by digit. The password is a three-digit number, ranging from 000-999. The factory default is 100. Refer to Figure 4.4, Password entry.
2. If the wrong password is entered, re-enter the correct one. After three attempts to enter the correct password, a recovery screen will appear. The screen will display a serial number that can be used for password recovery. A password recovery service is available. Contact your Limitorque service coordinator at (434) 528-4400.

Figure 4.4 – Password entry

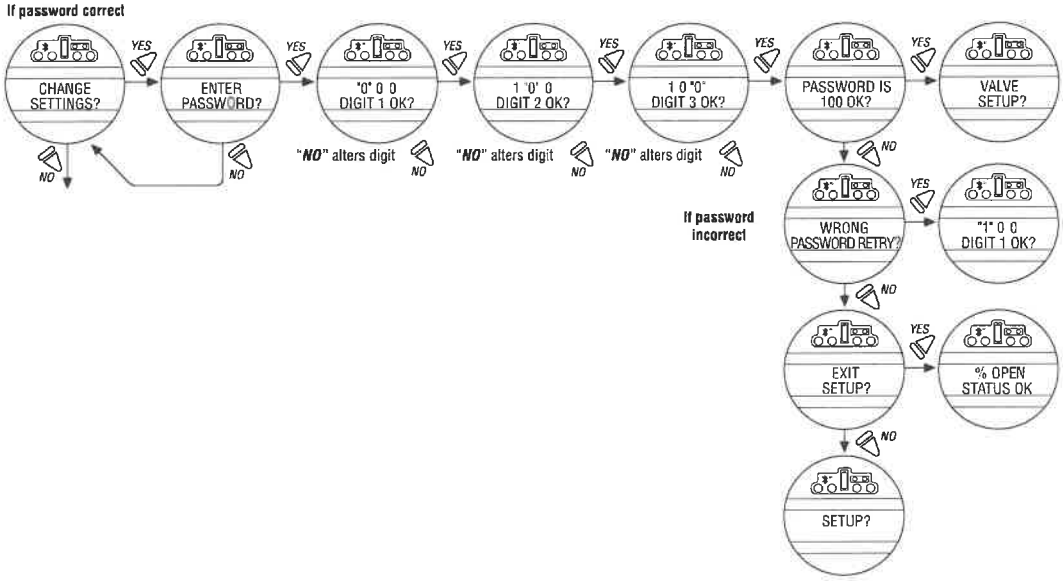

4.3 New Password

The password may be changed from the default of 100 to a customer-selected value. In the "CHANGE SETTINGS?" mode, select "NO" until "CHANGE PASSWORD" is displayed on the LCD. Proceed with changing the password as indicated in Figure 4.5.

The new password becomes effective as soon as the operator answers "YES" to the "RECORD PASSWORD?" display.

NOTE: Take care to record the new password in a secure location to ensure its retrieval in the future, yet prevent unauthorized access to the actuator "SETUP" routine.

If password protection is not required, the password may be set to "000." The user will not be prompted to enter a password when the password is set to "000."

Figure 4.5 – New password

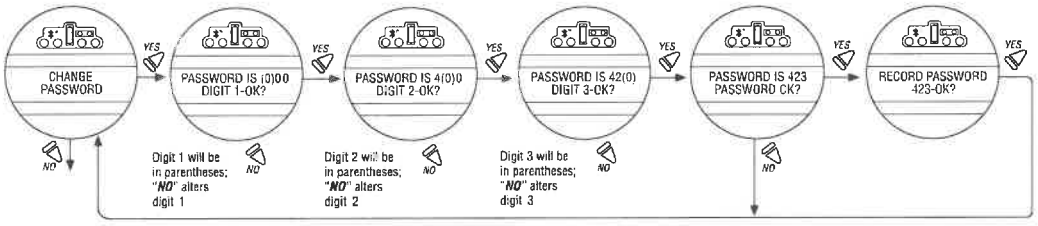

4.4 Valve Setup

Valve setup enables the actuator to be changed to suit the type of valve that it is mounted on.

4.4.1 Close Direction

Default = CW to Close

The majority of valves require clockwise (CW) rotation of the actuator drive sleeve when viewed from above the actuator.

1. Engage manual override and check whether the valve closes with CW or CCW rotation of the handwheel.
2. Select "NO" until the required direction is displayed, then "YES."

NOTE: If in doubt as to valve seating, consult the valve manufacturer.

NOTE: For torque seated valves, ensure that the "POSITION" limit is not set at "TORQUE" seat. It is recommended that the "POSITION" limit be set approximately one handwheel turn (360°) in the opposite direction from the "TORQUE" seat.

4.4.2 Close Seating

Default = Position Seating

1. Configure the actuator to close on "TORQUE" limit for seating valve types such as wedge gate and globe.
2. Configure the actuator to close on "POSITION" limit for valve types such as ball, butterfly, plug, sluice gate, parallel slide, knife gate, and through conduit.
3. Select "NO" until the required seating is displayed.
4. Select "YES" when correct seating is displayed.

4.4.3 Open Seating

Default = Position Seating

The majority of valves, regardless of their construction, seat on position limit in the open direction. Some valves are "back-seating" and require torque limit in the open direction.

1. Select "NO" until the required seating is displayed.
2. Select "YES" to return to the "VALVE SETUP?" display.

Figure 4.6 – Valve setup

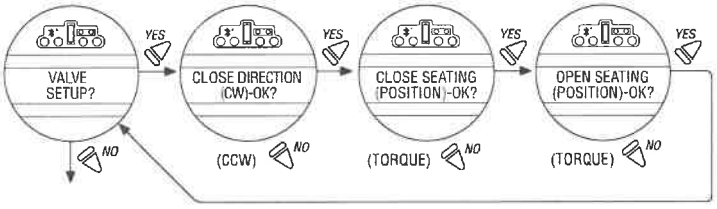

4.5 Torque Switch Timer

Torque switch timer permits a user to select a time for the torque switch to time out once the actuator determines that it has reached its torque seat. The torque switch timer can be adjusted from zero (0) seconds to a maximum of ten (10) seconds. The default is five (5) seconds.

NOTE: The purpose of this feature is to ensure that the torque sensing has shut off the motor after a brief period of time. It is an additional safety feature to prevent the actuator from reaching a stall torque. If operating in torque seating for either open or close torque seating, a backup timer can be used to halt the actuator to protect the valve in case the actuator does not torque out after it has passed the expected limit.

1. From "CHANGE VALVE SETUP?" select "NO" to get to the "CHANGE TORQUE TIMER" routine. This option will only appear if either the open or close valve setting is set to torque seating.
2. Select "YES" to change setting. If "NO" is selected, the "CHANGE OPERATING TIME?" routine will be entered.

4.5.1 Status

Default = ON

1. Select "NO" to change torque timer status to "OFF". If "OFF" is selected you will not advance to timer selection for that direction.

4.5.2 Torque Timer

The timer value is how long in seconds that the unit will run once it has passed the expected position limit.

Default = 5 seconds

1. Select "NO" to increase the timer value. The timer is configurable from 1-10 seconds. The counter will wrap around to 1 second when you attempt to increase after 10 seconds.

NOTE: If the unit is only setup for open torque seating, then only the open torque timer will be available to change. This is the same with close torque seating and the close torque timer. If both open and close torque seating are selected then you will be prompted to change close torque timer first, followed by open torque timer.

Figure 4.6 – Torque Switch Timer

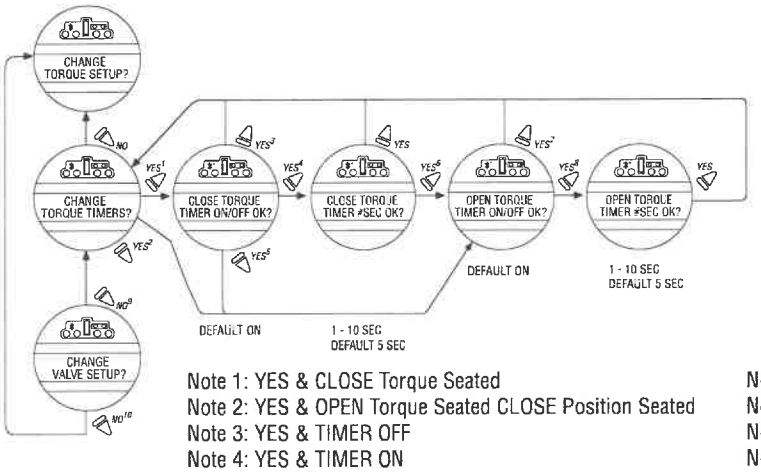

Note 1: YES & CLOSE Torque Seated
Note 2: YES & OPEN Torque Seated CLOSE Position Seated
Note 3: YES & TIMER OFF
Note 4: YES & TIMER ON
Note 5: YES & TIMER OFF & OPEN Torque Seated
Note 6: YES & OPEN Torque Seated
Note 7: YES & TIMER OFF
Note 8: YES & TIMER ON
Note 9: NO & Open or Close Torque Seated
Note 10: NO & OPEN/CLOSE Position Seated

4.6 Operating Time

All QX units are shipped with default operating time values based on unit size. The different sized units each have a specific range of operating times:

- QX-1: 5-20 sec, default 15 sec
- QX-2: 8-30 sec, default 30 sec
- QX-3: 15-60 sec, default 60 sec
- QX-4: 30-120 sec, default 60 sec
- QX-5: 60-120 sec, default 60 sec

These times are based on a 90° open to close span. Consult factory for multi-turn times.

The operating time can be set as desired as follows:

1. From "CHANGE SETTINGS?", select "YES" to enter the "CHANGE OPERATING TIME?" routine.
2. Select "YES" to change the opening operating time or "NO" to change the closing operating time.
3. When opening and closing operating times are set, select "NO" to return to the "CHANGE OPERATING TIME?" screen and then "NO" to move to the "VIEW TORQUE SETTINGS" screen.

Figure 4.8 – Operating Time Setup

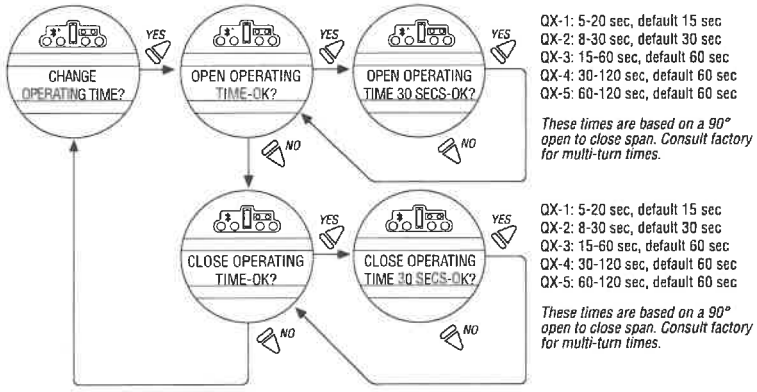

4.7 Torque Setup

The output torque can be changed between 40% and 100% of the rated torque as follows:

1. From "VALVE SETUP?" or "CHANGE TORQUE TIMER?" (if enabled), select "NO" to enter the "CHANGE TORQUE SETUP?" routine.
2. Select "YES" to change the settings.

If "NO" is selected, the "POSITION SETUP?" routine will be entered.

Figure 4.9 – Torque Setup

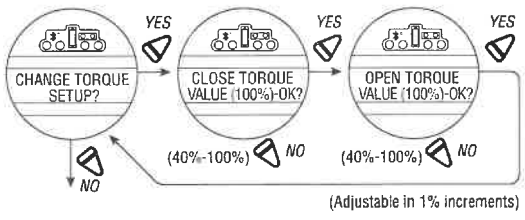

4.7.1 Close Torque Valve or Open Torque Valve

The output torque from the actuator to close or open the valve may be configured between 40% and 100% of the rated torque as stated on the actuator nameplate (See Figure 4.10), in 1% increments (unless limited by the factory).

To Increase the % of Torque Required:

1. Select "NO" until the desired % is indicated.
2. Select "YES" to save the required torque.

Should the user select a maximum torque setting less than 100% due to valve or gearbox limitations, this selection can be password protected.

Figure 4.10 – Typical QX nameplate

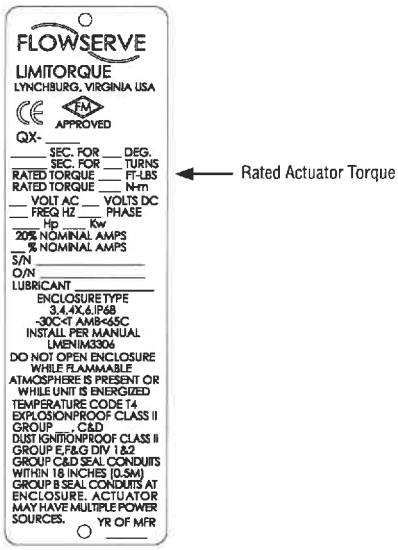

4.8 Position Setup

Enter the Change Settings Menu. After successfully entering the password, answer "NO" to the Change Settings menu prompts until you reach the prompt "CHANGE POSITION SETUP?" Answer "YES." The positions can be changed either electronically (Section 4.8.1) or manually (Section 4.8.2).

4.8.1 Set Position Limits for Electrical Operation

1. Refer to Figure 4.11, Electrical operation.
2. To set the valve closed position, select "YES" to the "SET CLOSE POSITION LIMIT?" display. At the "CLOSE VALVE–OK?" prompt, answer "YES" and move the red control knob to "LOCAL." Hold the black control knob in the "CLOSE" position until the valve has reached the desired position. Move the red control knob to "STOP." If the valve close position is correct, select "YES" to the "CLOSE VALVE OK?" prompt and "YES" to "SAVE CLOSE LIMIT OK?"; otherwise, select "NO" to return to the "SET CLOSE POSITION LIMIT?" display.
3. To set the valve open position, select "YES" to the "SET OPEN POSITION LIMIT?" display. At the "OPEN VALVE–OK?" prompt, answer "YES" and move the red control knob to "LOCAL." Hold the black control knob in the "OPEN" position until the valve has reached the desired position. Move the red control knob to "STOP." If the valve open position is correct, select "YES" to the "OPEN VALVE OK?" prompt and "YES" to "SAVE OPEN LIMIT OK?"; otherwise, select "NO" to return to the "SET OPEN POSITION LIMIT?" display.

4. Inspect for correct operation. If the position limits are set adjacent to each other, then an error message will be displayed: "KEEP OPEN (CLOSE) LIMIT." The position calibration is now complete. The actuator will function as ordered. Inspect for correct operation by running actuator electrically.

5. Adjust precision, if desired, by answering "YES" to the "SET POSITION PRECISION?" display. Otherwise, select "NO" to return to the "CHANGE POSITION SETUP?" in the main setup menu group.

NOTE: For torque seated valves, ensure that the Position limit is not set at torque seat. It is recommended that the Position limit be set approximately one handwheel turn (360°) in the opposite direction from the torque seat.

4.8.2 Set Position Limits for Manual Operation

1. Refer to Figure 4.12, Handwheel operation.

2. To set the valve closed position, select "YES" to the "SET CLOSE POSITION LIMIT?" display. At "CLOSE VALVE-OK?" depress declutch lever and slowly rotate handwheel until clutch is fully engaged. Release declutch lever; the clutch will stay in handwheel mode. If the valve is fully closed, move the handwheel one turn in the open direction to allow for coasting of the motor. When valve is in the desired location, select "YES." At "SAVE CLOSE LIMIT-OK?" select "YES" to set the close position or "NO" to adjust the setting.

3. To set the valve open position, select "YES" to the "SET OPEN POSITION LIMIT?" display. At the "OPEN VALVE-OK?" engage the clutch (see step 2). Valve should be fully opened. Move the handwheel one turn toward the closed position to allow for coasting of the motor. When valve is in the desired location, select "YES." At "SAVE CLOSE LIMIT-OK?" select "YES" to set the close position or "NO" to adjust the setting.

4. Inspect for correct operation. If the position limits are set adjacent to each other, then an error message will be displayed: "KEEP OPEN (CLOSE) LIMIT." The position calibration is now complete. The actuator will function as ordered. Inspect for correct operation by running actuator electrically.

5. Adjust precision if desired by answering "YES" to the "SET POSITION PRECISION?" display. Otherwise, select "NO" to return to the "CHANGE POSITION SETUP?" in the main setup menu group.

NOTE: For torque seated valves, ensure that the Position limit is not set at torque seat. It is recommended that the Position limit be set approximately one handwheel turn (360°) in the opposite direction from the torque seat.

Figure 4.11 – Electrical operation

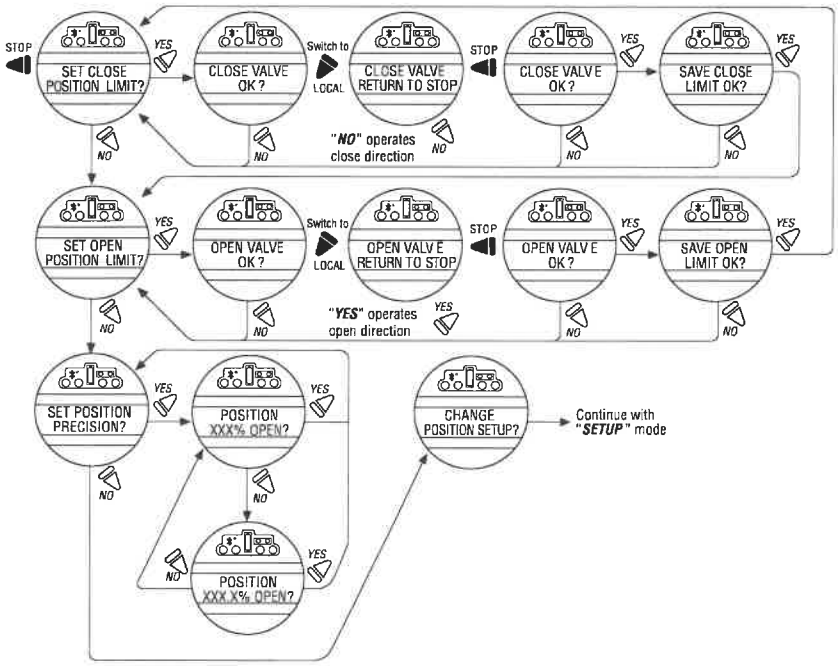

Figure 4.12 – Handwheel operation

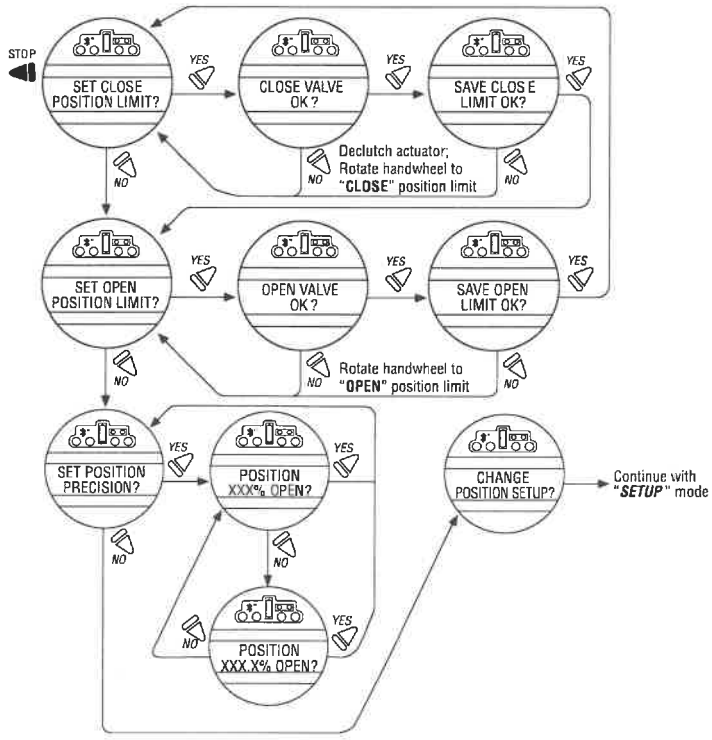

4.9 Modutronic Option

The Modutronic option enables the actuator to be controlled via a milliamp input signal.

- If the Modutronic option has been purchased, it is automatically calibrated when position limits are set. No further adjustments are required, unless the defaults do not suit the application.
- If the Modutronic option has not been purchased, the screens for changing Modutronic will not be available. To add the Modutronic option, please consult Limitorque service at (434) 528-4400.

4.9.1 Status

Default = OFF

Select "NO" to change Modutronic status to "ON." If "OFF" is selected, no further menus will be displayed.

4.9.2 Proportional Band

Proportional band is the range of errors between position and demand signal that will produce reduced speed (pulsing).

Default = 15%

To change from the default, select "NO" until the required value is displayed. The value is adjustable between 1% and 100%, in 1% increments.

4.9.3 Fail Position

Fail position enables the customer to change the response of the actuator on loss of the milliamp signal.

Default = "CLOSE" Position

Fail position takes effect when the signal level falls below 2 mA or rises above 20.5 mA.

To Change the Default Position:
Select "NO" to choose whether the valve moves to "CLOSE" or "OPEN" position, or "STOP" which stops the valve in its present position at the time of signal failure.

4.9.4 Deadband

Default = +/-2%

The deadband should be wide enough to prevent "hunting" of the actuator but as low as possible to give adequate response to changes in the error signal.

To Change from the Default:
Select "NO" to adjust the value between 1% and 50%, in 1% increments to suit the application, or 0.1% to 50.0% if the position precision is set to XXX.X%.

4.9.5 Polarity (20 mA)

Polarity allows the user to change the valve position corresponding to the maximum milliamp value.

Default: 20 mA = Full Open

Select "NO" to select the required position of the valve that is to correspond to the maximum signal level of 20 mA.

Choose between: 20 mA = Full Close or Full Open.

4.9.6 Delay After Stop

Default setting = 0 seconds

To change from the default setting, select "NO" to adjust the length of delay time after the actuator stops modulating. The delay after stop is adjustable from 0-60 seconds.

Figure 4.13 – Modutronic option

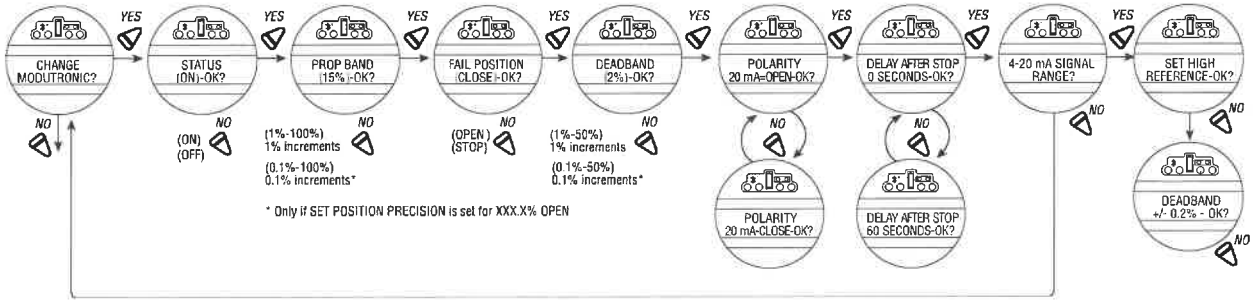

4.9.7 4-20 mA Signal Range

Signal range allows the user to change the signal range from the default range.

Default Setting is for High Reference = 20 mA (High Reference can also be scaled to some older 10-50mA instrumentation systems. A 166.66 Ohm resistor should be placed across the milliamp inputs when scaled from 10-50 mA.)

Default Setting for Low Reference = 4 mA

To change signal range (i.e. 4 mA-12 mA or 12 mA-20 mA or others) answer "YES." Proceed from "SET HIGH REFERENCE" to "SET HIGH REFERENCE - OK?" A "YES" answer will require the use of a calibrator. If no, change to the signal range is required, answer "NO" and return to "CHANGE MODUTRONIC?" dialog.

4.9.8 Set High Reference

Default = 20 mA

1. Select "NO" to accept pre-existing setting (no change).
2. Select "YES" to enter the display "APPLY HIGH LEVEL CONTROL SIGNAL."
3. Apply this signal to terminal 19 and 20 indicated on the wiring diagram.
4. Select "YES" again to record this signal as the high reference. See Figure 4.13.

4.9.9 Set Low Reference

Default = 4 mA

1. Select "NO" to move from "SET HIGH REFERENCE" to "SET LOW REFERENCE."
2. Select "YES" to enter the display "APPLY LOW LEVEL CONTROL SIGNAL."
3. Using a calibrator, apply the low signal, and select "YES" to record this signal as the low reference.

Figure 4.14 – Modutronic signals

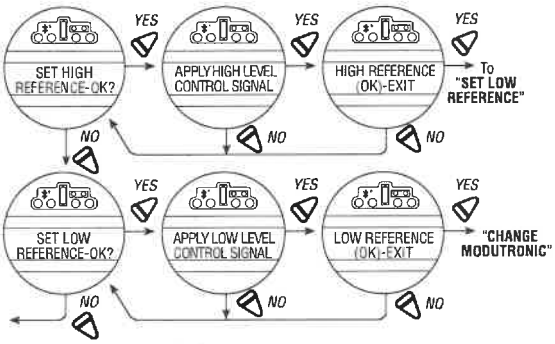

Flow to "CHANGE MODUTRONIC"

4.9.10 Modutronic LCD Display

When the Modutronic option has been purchased, is set to "ON," and the red selector switch is in "REMOTE," the normal LCD display will read:

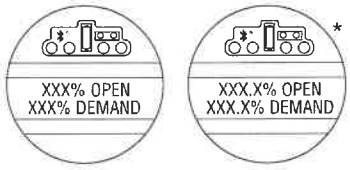

* If SET POSITION PRECISION is set to XXX.X% OPEN

XXX% Demand is the percentage value of the milliamp input signal.

4.9.11 Modutronic Filter Factor (QXM Only)

Configure analog input filter strength. Filter strength can be configured from 3-100. The lower the filter factor the more responsive the actuator is to mA changes. The greater the filter factor, the more electrical noise suppression protection is provided on mA input lines. It is recommended that the greater the number of required starts per hour, the lower the filter factor number.

Default = 20

4.10 DDC/Modbus Option

DDC option enables the actuator to be controlled by an RS-485 serial communication signal. If the DDC option has been purchased, it is automatically enabled. The customer must set the DDC address.

NOTE: If the DDC option has not been purchased, the screens for changing DDC will not be available. To add the DDC option, please consult Limitorque service at (434) 528-4400.

QX Multi-control Mode Operation - The QX is equipped with the ability to hardwire to digital inputs for control, set-up for analog control (Modutronic), or control via network protocols. In order to utilize this feature, select "Multi-control mode" operation located in Section 4.17, Remote Mode. This is the default setting for remote control. There are three modes of remote control when remote mode is configured for multi control: digital control, analog control, and network control. Digital and network control operation is based on the last command received. Analog operation is initiated by either toggling user input 2 (configure for CSE input) or breaking and reapplying the analog control.

4.10.1 Status

Default = ON

DDC Status enables user to change from the default condition to turn on and off the digital control capability of the actuator.

To Change from the Default Setting: Select "NO" to switch DDC to "OFF." If "OFF" is selected, no further menus will be displayed.

4.10.2 Network Address

Default = 1

Network address allows user to assign a unique network address to an actuator.

1. The network address must be entered in accordance with the Instrument Data Sheet, and care must be taken to ensure that the same address is not used anywhere else in the same network.
2. Select "NO" for small incremental changes or hold it continuously in that position for larger changes until the required value is displayed. The address may be set at any value between 001 and 250.

4.10.3 Protocol

Default = Modbus RTU 9600 Baud

Protocol changes the communication language/speed from the default to match the application.

To Change from the Default Language:
Select "NO" to choose between MODBUS, ASCII, or RTU, and the baud rate depending on the design of the DDC system. Refer to the contract documentation.

4.10.4 Analog Scale

Default = 0-100

Analog scale allows the user to change the scaling of the analog input from the default.

To Change from the Default Range:
Select "NO" until the required scale is displayed. 0-255 and 0-4095 counts are available.

4.10.5 ESD Action

A network ESD function can be enabled after the ESD configuration has been established for the unit. This network ESD can be selected to either ignore the command; Close, Open, Stop, or Position the actuator.

Figure 4.15 – DDC

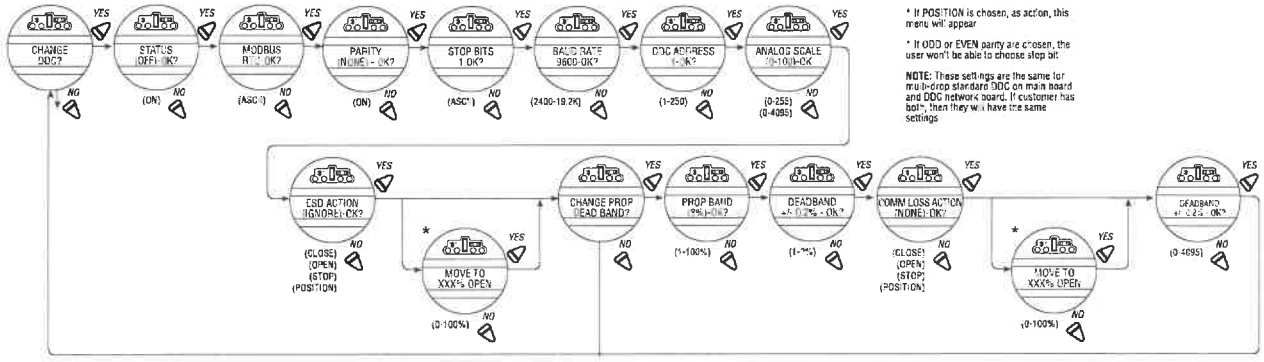

4.10.6 Proportional Band

Proportional band is the range of errors between position and demand signal that will produce reduced speed (pulsing).

Default = 15%

To change from the default, select "NO" until the required value is displayed. The value is adjustable between 1% and 100%, in 1% increments.

4.10.7 Deadband

Default =+/- 2%

The deadband should be wide enough to prevent "hunting" of the actuator but as low as possible to give adequate response to changes in the error signal.

To Change from the Default Range:
Select "NO" to adjust the value between 0.5% and 50%, in 0.5% increments to suit the application.

4.10.8 Offset

Default = 4 mA/20 mA

No options are available. Select "YES."

4.10.9 Move To

If positioning is selected as an action, then the Move To dialog will appear. Position is configurable from 0-100%.

4.10.10 Comm Loss Delay

Default = 60 sec.

The User may select the amount of time delay before communication loss is flagged to the network. This selection is configurable from 0-120 seconds.

4.10.11 Comm Loss Action

Default = None

The User may select what action the actuator should take when network communication is interrupted. This action is configurable as Close, Open, Stop, Position.

4.11 FF Option

FF option enables the actuator to be controlled by a Foundation Fieldbus communications signal. If the option has been purchased, it is automatically enabled. A Fieldbus System configuration tool must be used by the customer to set the FF address.

NOTE: If the FF option has not been purchased, the screens for changing FF will not be available. To add the FF option, please consult Limitorque service at (434) 528-4400.

QX Multi-control Mode Operation - The QX is equipped with the ability to hardwire to digital inputs for control, set-up for analog control (Modutronic), or control via network protocols. In order to utilize this feature, select "Multi-control mode" operation located in Section 4.17, Remote Mode. This is the default setting for remote control. There are three modes of remote control when remote mode is configured for multi control: digital control, analog control, and network control. Digital and network control operation is based on the last command received. Analog operation is initiated by either toggling user input 2 (configure for CSE input) or breaking and reapplying the analog control.

4.11.1 Status

Default = ON

FF Status enables user to change from the default condition to turn on and off the digital control capability of the actuator.

4.11.2 Terminate Bus

Should a user select to make this unique actuator the termination point for the network, select "YES." If not, then "NO." Default is "NO."

4.11.3 Analog Scale

Default = 0-100

Analog scale allows the user to change the scaling of the analog input from the default.

To Change from the Default Range:
Select "NO" until the required scale is displayed. 0-255 and 0-4095 counts are available.

4.11.4 ESD Action

A network ESD function can be enabled after the ESD configuration has been established for the unit. This network ESD can be selected to either ignore the command; Close, Open, Stop, or Position the actuator.

4.11.5 OPEN/CLOSE Mode

Default = YES

To select operation as typically "OPEN" or "CLOSE," select "YES." To select operation as position mode, select "NO."

4.11.6 Proportional Band

Proportional band is the range of errors between position and demand signal that will product reduced speed (pulsing).

Default = 15%

To change from default, select "NO" until the required value is displayed. The value is adjustable between 1% and 100%, in 1% increments.

4.11.7 Deadband

Default = +/-2%

The deadband should be wide enough to prevent "hunting" of the actuator but as low as possible to give adequate response to changes in the error signal.

To change from default, select "NO" to adjust the value between 1% and 50%, in 1% increments to suit the application.

Figure 4.16 – Foundation Fieldbus

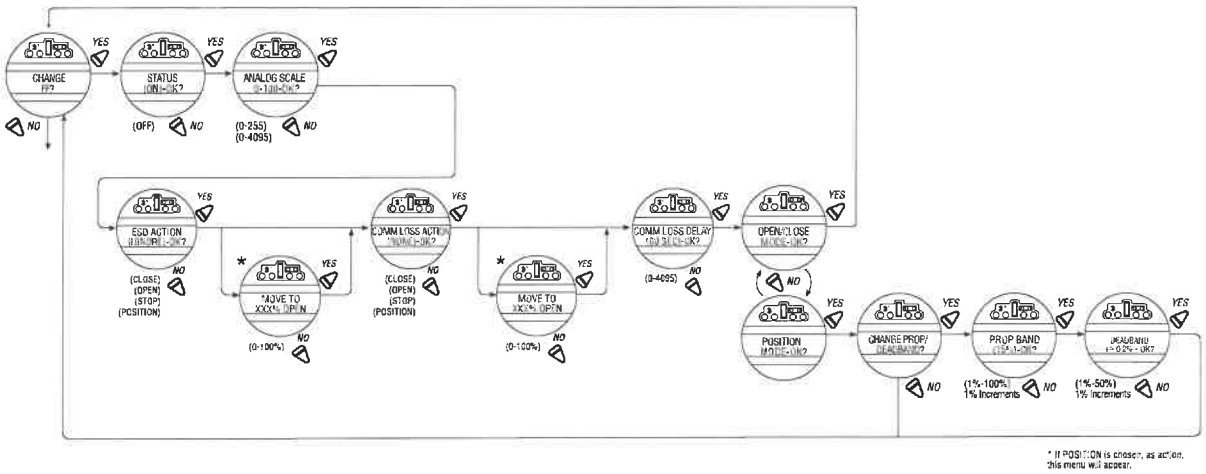

4.11.8 Comm Loss Delay

Default = 60 sec.

The User may select the amount of time delay before communication loss is flagged to the network. This selection is configurable from 0-120 seconds.

4.11.9 Comm Loss Action

Default = None

The User may select what action the actuator should take when network communication is interrupted. This action is configurable as Close, Open, Stop, Position.

4.12 PB Option

PB option enables the actuator to be controlled by a Profibus communications signal. If the option has been purchased, it is automatically enabled. A Fieldbus System configuration tool must be used by the customer to set the PB address.

NOTE: If the PB option has not been purchased, the screens for changing PB will not be available. To add the PB option, please consult Limitorque service at (434) 528-4400.

QX Multi-control Mode Operation - The QX is equipped with the ability to either hardwire to digital inputs for control, set-up for analog control (Modutronic), or control via network protocols. In order to utilize this feature, then select "Multi-control mode" operation located in Section 4.17, Remote Mode. This is the default setting for remote control. There are three modes of remote control when remote mode is configured for multi control: digital control, analog control, and network control. Digital and network control operation is based on the last command received. Analog operation is initiated by either toggling user input 2 (configure for CSE input) or breaking and reapplying the analog control.

Figure 4.17 – Profibus DP

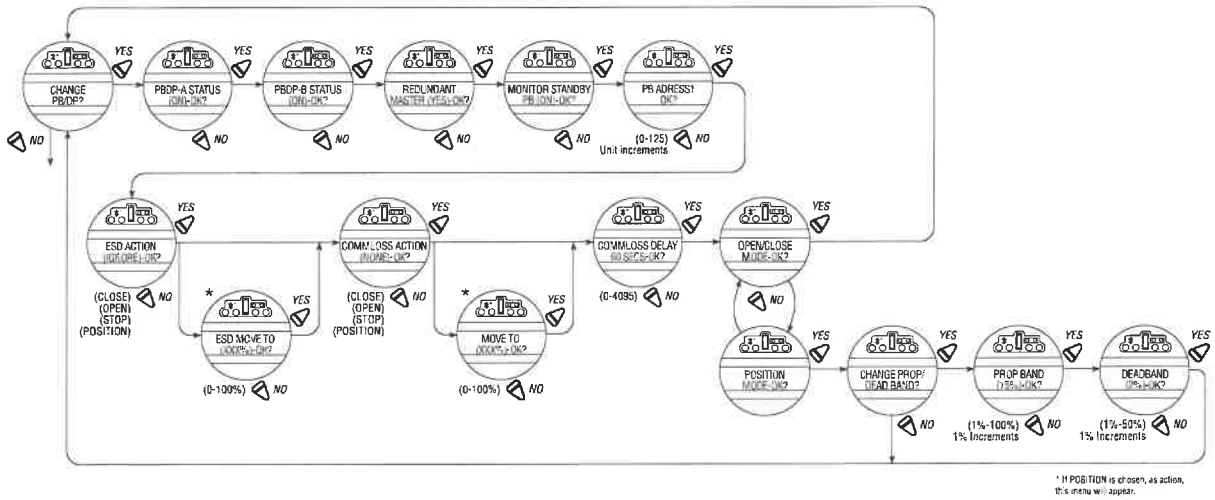

4.12.1 Status

Default = ON

PB Status enables user to change from the default condition to turn on and off the digital control capability of the actuator.

4.12.2 PB DP Operation

Figure 4.17 illustrates the setup sequence for the MX/QX PB DP field unit. For proper operation, either Position Mode or Open/Close Mode must be selected.

Follow these steps to enter and configure the setup mode:

1. Proceed through the Setup to the CHANGE PBDP? display.
2. Select YES to proceed to the PBDP-A STATUS (ON)-OK? display. PBDP-A Status enables the user to change from the default condition to turn on and off the digital control capability of the actuator.
3. Select YES to proceed to the PBDP-B STATUS (ON)-OK? display. PBDP-B Status enables the user to change from the default condition to turn on and off the redundant digital control capability of the actuator, if installed.
4. Select YES to proceed to the REDUNDANT MASTER (YES)-OK? display. Selecting REDUNDANT MASTER will allow for System Redundancy with two independent connections to Profibus masters. REDUNDANT MASTER must be set to NO for Flying Redundancy (single Profibus master connection).
5. If YES is selected, MONITOR STANDBY PB (ON)-OK? is displayed.
6. To allow the standby Profibus master to monitor the health of the actuator's standby PB DP board, select YES.
7. The unit will display PB ADDRESS 1–OK? If OK, select YES. If NO, select different address (1-125).
8. Select YES to proceed to the ANALOG SCALE display.
9. From ANALOG SCALE, if the default value of 0-100 is OK, select YES. If not, select NO.
10. If YES is selected, ESD ACTION (IGNORE) – OK? is displayed.
11. For ignoring ESD ACTION, select YES. For setting ESD ACTION, select NO. If POSITION is chosen as action, ESD MOVE TO (XXX%)-OK? is displayed. Select NO to set desired position.
12. If YES is selected, COMM LOSS ACTION (NONE) – OK? is displayed.

13. For no COMM LOSS ACTION, select YES. For setting COMM LOSS ACTION, select NO. If POSITION is chosen, as action, COMM LOSS MOVE TO (XXX%)-OK? is displayed. Select NO to set desired position.
14. If YES is selected, COMM LOSS DELAY (60 SEC) – OK? is displayed.
15. For a 60-second delay, select YES. Otherwise, select NO until the required value is displayed.
16. If YES is selected, OPEN/CLOSE MODE-OK? is displayed.
17. For OPEN/CLOSE MODE, select YES. For POSITION MODE, select NO. In position mode, the host device can set the valve position to any desired value; in OPEN/CLOSE MODE the host can only fully open or fully close the valve. The user must locally configure one of these two modes.
18. Proceed to configure the proportional band and deadband as discussed in the next sections.

4.12.3 Comm Loss Delay

Default = 60 sec.

The User may select the amount of time delay before communication loss is flagged to the network. This selection is configurable from 0-120 seconds.

4.12.4 Comm Loss Action

Default = None

The User may select what action the actuator should take when network communication is interrupted. This action is configurable as Close, Open, Stop, Position.

Figure 4.18 – Profibus PA

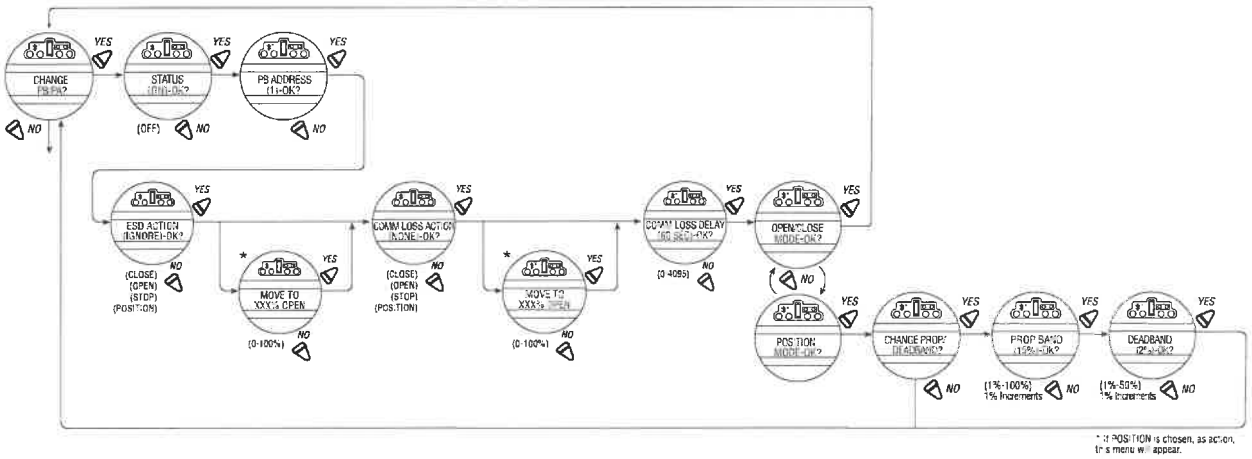

4.13 DN Option

DN option enables the actuator to be controlled by a DeviceNet communications signal. If the option has been purchased, it is automatically enabled. A DeviceNet System configuration tool must be used by the customer to set the DN address.

NOTE: If the DN option has not been purchased, the screens for changing DN will not be available. To add the DN option, please consult Limitorque service at (434) 528-4400.

QX Multi-control Mode Operation - The QX is equipped with the ability to hardwire to digital inputs, set-up for analog control (Modutronic), or control via network protocols. In order to utilize this feature, select "Multi-control mode" operation located in Section 4.17, Remote Mode. This is the default setting for remote control. There are three modes of remote control when remote mode is configured for multi control: digital control, analog control, and network control. Digital and network control operation is based on the last command received. Analog operation is initiated by either toggling user input 2 (configure for CSE input) or breaking and reapplying the analog control.

4.13.1 Status

Default = ON

DN Status enables user to change from the default condition to turn on and off the digital control capability of the actuator.

4.13.2 Baud Rate

Default = 125K Baud

Baud rate changes the communication speed from the default to match the application.

To Change from the Default Speed:
Select "NO" to choose between 125k, 250k, 500k baud rate depending on the design of the DN system. Refer to the contract documentation.

4.13.3 Network Address

Default = 1

Network address allows user to assign a unique network address to an actuator.

1. The network address must be entered in accordance with the Instrument Data Sheet, and care must be taken to ensure that the same address is not used anywhere else in the same network.
2. Select "NO" for small incremental changes or hold it continuously in that position for larger changes until the required value is displayed. The address may be set at any value between 001 and 63.

To Change from the Default Range:
Select "NO" until the required scale is displayed. 0-255 and 0-4095 counts are available.

4.13.4 ESD Action

A network ESD function can be enabled after the ESD configuration has been established for the unit. This network ESD can be selected to either "IGNORE" the network command; or Close, Open, Stop, Position the actuator.

4.13.5 Proportional Band

Proportional band is the range of errors between position and demand signal that will produce reduced speed (pulsing).

Default = 15%

To change from the default, select "NO" until the required value is displayed. The value is adjustable between 1% and 100%, in 1% increments.

4.13.6 Deadband

Default = 2%

The deadband should be wide enough to prevent "hunting" of the actuator but as low as possible to give adequate response to changes in the error signal.

To Change from the Default Range:
Select "NO" to adjust the value between 1% and 50%, in 1% increments to suit the application.

Figure 4.19 – DN Option

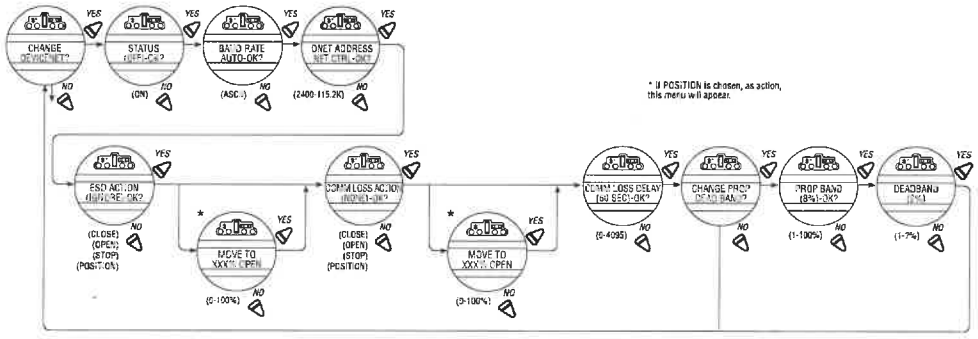

4.13.7 Comm Loss Delay

Default = 60 sec.

The User may select the amount of time delay before communication loss is flagged to the network. This selection is configurable from 0-120 seconds.

4.13.8 Comm Loss Action

Default = None

The User may select what action the actuator should take when network communication is interrupted. This action is configurable as Close, Open, Stop, Position.

HART option enables the actuator to be controlled by a Highway Addressable Remote Transducer communications signal. If the option is purchased, it is automatically enabled. The device address is fixed for point-to-point connection, but must be set by customer for multi-drop topology.

4.14 HART Option

HART option enables the actuator to be controlled by a Highway Addressable Remote Transducer communications signal. If the option is purchased, it is automatically enabled. The device address is fixed for point-to-point connection, but must be set by customer for multi-drop topology.

NOTE: If the HART option has not been purchased, the screens for changing HART will not be available. To add the HART option, please consult Limitorque service at (434) 528-4400.

The QX is equipped with the ability to either hardwire to digital inputs for control, set-up for analog control (Modutronic), or control via network protocols. In order to utilize this feature, select "Multi-control mode" operation located in Section 4.16, Remote Mode. This is the default setting for remote control. There are three modes of remote control when remote mode is configured for multi-control: digital control, analog control, and network control. Digital

and network control operation is based on the last command received. Analog operation is initiated be either toggling user input 2 (configure for CSE input) or breaking and reapplying the analog control signal.

Figure 4.20 – HART

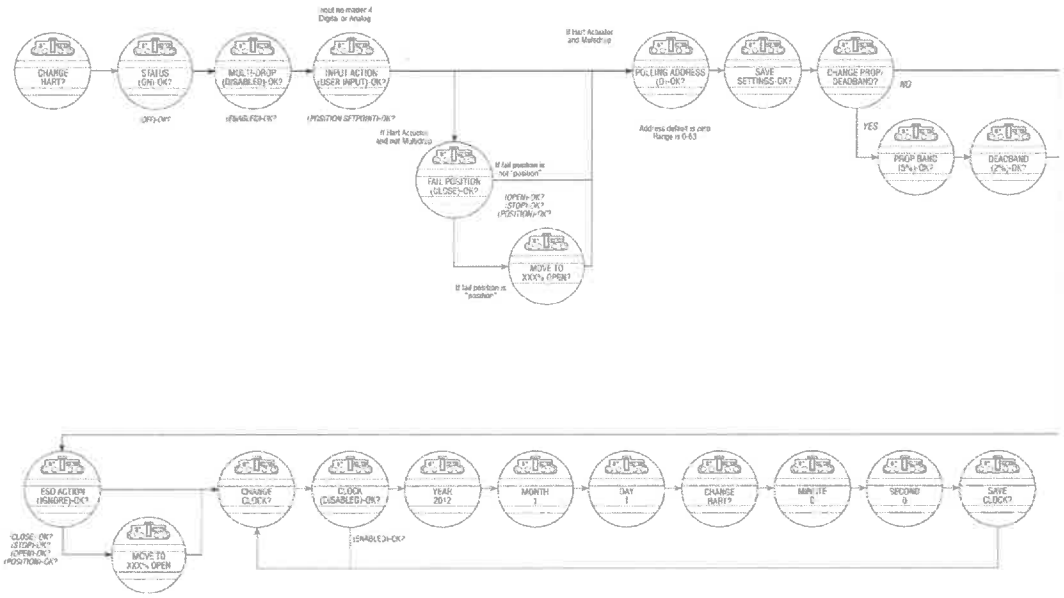

4.14.1 Status

Default = on

HART status enables user to change from the default condition to turn on and off the digital control capability of the actuator

4.14.2 Multi-drop

Default = disabled

MULTI-DROP (ENABLED) or (DISABLED) allows the user to select the desired network topology. To change the setting, select NO until the required option is displayed. Select YES if the setting is correct to go to the next display.

NOTE: Changing the topology also requires that the network be wired correctly for the selected topology.

4.14.3 Input action

Default = user input

INPUT ACTION allows the user to set the input action as USER INPUT or POSITION SETPOINT.

NOTE: If MULTI-DROP ENABLED was chosen, skip to POLLING ADDRESS. Otherwise, FAIL POSITION display is shown. In multi-drop mode the input is digital only (write PV over network), so there is no analog fail action.

4.14.4 Fail position

Default = close

FAIL POSITION allows the user to configure the action desired upon loss of the analog input signal. The selections are CLOSE, OPEN, STOP, and POSITION. Select the desired setting and proceed to the next display.

NOTE: If POSITION is chosen as the action, a MOVE TO display will be shown where the user can select the desired position between 0 and 100% open, in one percent increments, by selecting NO until the desired position is selected. Select YES once the setting is correct to go to the next display.

4.14.5 Polling address

Default = 0

POLLING ADDRESS allows the user to set the HART polling address of the unit. Point-to-Point units are typically set to address 0, and Multi-drop units are typically set from 1-63. HART 5 masters will always set Point-to-Point units to address 0.

4.14.6 Save settings

SAVE SETTINGS allows the user to save the settings and make them active. This can result in a change in the hardware configuration on the HART board to support the change in configuration. Select NO to return to STATUS and change settings. Select YES to save the HART configuration settings and go to additional network settings.

NOTE: The configuration set in steps 1-6 will not be saved if the user does not select YES for SAVE SETTINGS.

4.14.7 Change prop / deadband

Change prop / deadband allows for the setting of proportional band and deadband. Proportional band is the range of errors between the position and demand signal that will produce reduced speed (pulsing). The default value is 5%. To

Change from default, select no until the required value is displayed. The value is adjustable between 1% and 100%, in 1% increments. The default deadband value is 2%. For error signals less than this, no motion occurs. The deadband should be wide enough to prevent "hunting" of the actuator but as low as possible to give adequate response to changes in the error signal. To change from the default, select no to adjust the value between 1% and 50%, in 1% increments to suit the application.

4.14.8 ESD action

Default = none

ESD ACTION allows a network ESD function to be enabled after the ESD configuration has been established for the unit. This network ESD can be selected to do one of the following: ignore the command (NONE), CLOSE, OPEN, STOP, or POSITION the actuator. To change from the default setting, select NO until the required option is displayed. Select YES if the setting is correct to go to the next display.

NOTE: If POSITION is chosen as the action, a MOVE TO display will be shown where the user can select the desired position between 0 and 100% open, in one percent increments, by selecting NO until the desired position is selected. Select YES once the setting is correct to go to the next display.

4.15 Status and Alarm Contacts

The status and alarm contacts permit wiring to existing contacts for visibility of operation or fault conditions. (See wiring diagram for contact ratings.)

The status contacts (S) and optional alarm contacts (R) may be configured to have any one of the following functions:

- "CLOSING" – valve closing
- "OPENING" – valve opening
- "STOPPED" – valve stopped in mid-travel
- "VALVE MOVING" – either direction
- "LOCAL SELECTED" – red selector knob in "LOCAL"
- "MOTOR OVERTEMP" – thermistor range exceeded
- "OVERTORQUE" – torque exceeded in mid-travel
- "MANUAL OVERRIDE" – actuator moved by handwheel
- "VALVE JAMMED" – valve can't move
- "CLOSE TORQUE SW" – torque switch trip at "CLOSED"
- "OPEN TORQUE SW" – torque switch trip at "OPEN"
- "LOCAL STOP/OFF" – red selector knob at "STOP"
- "LOST PHASE" – one or more of three phases lost
- "ESD SIGNAL" – signal active
- "CLOSE INHIBIT" – close inhibit signal active
- "OPEN INHIBIT" – open inhibit signal active
- "ANALOG IP LOST" – 4-20 mA not present
- "REMOTE SELECTED" – red selector in "REMOTE"
- "LIMIGARD ACTIVE" – (future—LimiGard™ functionality is not affected)
- "HARDWARE FAILURE" – indication
- "NETWORK CONTROLLED" – permits relay control via DDC, FF, or other network driver
- "CLOSE" – valve closed "(0% OPEN)"
- "OPEN" – valve open "(100% OPEN)"
- "MID-TRAVEL" – valve position, 1-99% open
- "CSE CONTROL" – CSE station in LOCAL or STOP and controls actuator
- "STRTS/HR EXCEED" – actuator starts per hour exceeded.

4.15.1 Status and Alarm Contact Default Settings

All actuators are supplied with the following status or alarm (optional) contact default factory settings:

Status Contacts

S1a – Normally closed contact at valve fully Close
S1b – Normally closed contact at valve fully Open
S2a – Normally open contact at valve fully Close
S2b – Normally open contact at valve fully Open

Alarm Contacts (Optional/requires I/O board)

R1 – Normally closed contact at valve fully Close
R2 – Normally closed contact at valve fully Open
R3 – Normally open contact at valve fully Close
R4 – Normally open contact at valve fully Open
R5 – Motor Overtemp
R6 – Remote Selected
R7 – Overtorque
R8 – Analog I/P (Input)

To change any of the default settings:

Select "CHANGE STATUS & ALARM CONTACTS?" from the "SETUP" routine.

Select "YES" to enter the "SETUP" routine for each individual contact. Select "NO" until the particular contact is referenced in the display, then "YES" to make the changes.

4.15.2 Status Function

Toggle "NO" through the range of functions, as listed, until the desired feature is displayed.

Figure 4.21 – Status and alarm contacts (Shown with optional boards added)

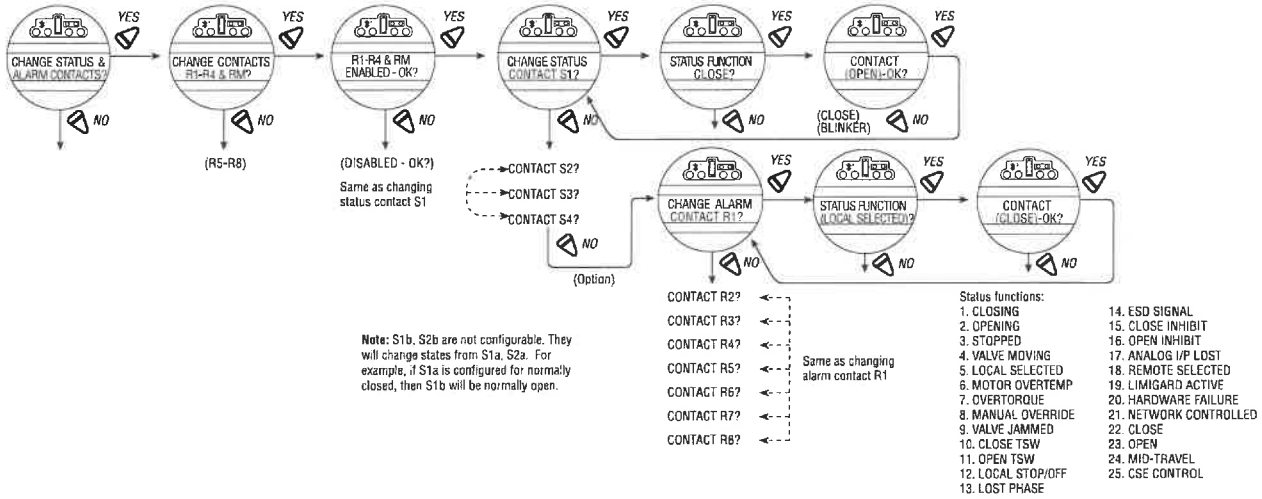

4.15.3 Contact

This mode allows the user to select the state of the contact when the function is active. Select "NO" to choose whether the contact is required to be normally closed, normally open, or blinker when the function is active. When "Blinker" has been selected, the contact will switch automatically between open and close (1 second open/1 second close).

4.15.4 Valve Position

This display will appear only if the function "MID-TRAVEL POSITION" has been selected. Toggle "NO" until the display indicates the required value of percentage "OPEN" at which the contact should trip. If the contact has been selected as normally closed, then it will close when the trip point has been reached, with the actuator moving in the open direction.

NOTE: Status contacts (S) and optional alarm (R) contacts are latching type and will remain in their last set position in the event of a main power supply failure.

4.16 Two-speed timer (optional)

The optional two-speed timer extends the operating time of the actuator, in the closing and/or the opening direction, by pulsing the motor on and off. Pulsing may be applied to full valve travel or only a part of it. The on and OFF pulse times are adjustable.

1. Select "CHANGE 2-SPEED TIMERS?"
2. Select "YES" to enter the "CHANGE OPEN TIMER?" routine.
3. If slow opening is required, select "YES;" otherwise select "NO" to move into the "CHANGE CLOSE TIMER?" routine.

4.16.1 Status

Select "NO" to switch the timer ON or OFF. If OFF, no further menus will be displayed.

4.16.2 Start Position

If the Close or Open timer has been switched ON, pulsing will start when the set point is reached in the selected direction and the actuator will continue pulsing until the valve reaches the desired "STOP" position.

Select "NO" until the display indicates the required value of percentage OPEN at which the pulsing should start. Adjustable in 1% increments as listed:

Closing = 0% to 99%. Opening = 1% to 100%.

4.16.3 Stop Position

If the Close or Open timer has been switched ON, pulsing will commence as the valve moves out of its close position and the actuator will continue pulsing until stopped at the set point.

Select "NO" until the display indicates the required value of percentage open at which the pulsing should stop. Adjustable in 1% increments as listed:

Closing = 0% to 99%. Opening = 1% to 100%.

4.16.4 Pulse Time – ON

This mode allows user to change the ON pulse time from the default setting.

Default Setting = 2.0 Second

Select "NO" until the required length of ON pulse is displayed. Adjustable between 1 and 20 seconds, in 0.5 second increments.

Figure 4.22 – Two-speed timers

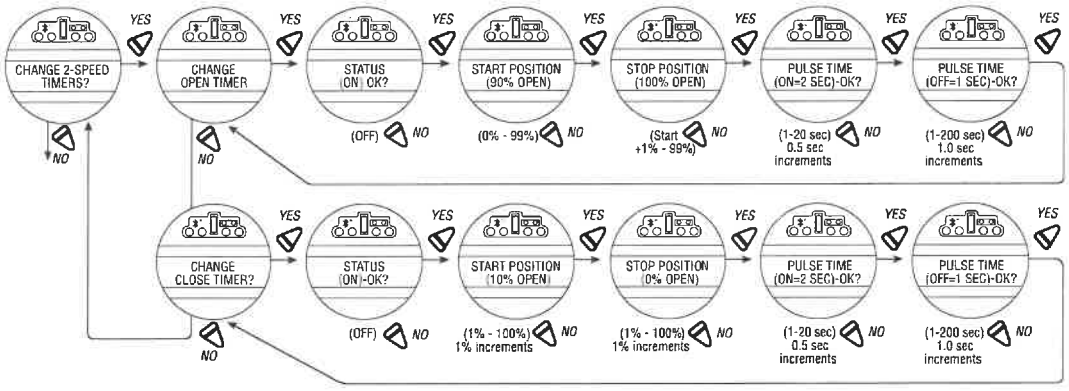

4.16.5 Pulse Time – OFF

This mode allows user to change the OFF pulse time from the default setting.

Default Setting = 1 Second

Select "NO" until the required length of OFF pulse is displayed. Adjustable between 1 and 200 seconds, in 1.0 second increments.

4.17 Change Analog Out

The QX offers an optional, configurable analog output feedback signal. The User may select between APT (Analog Position Transmitter) or ATT (Analog Torque Transmillter) functionality. Each selection is defined below.

Figure 4.23 – Change Analog Out

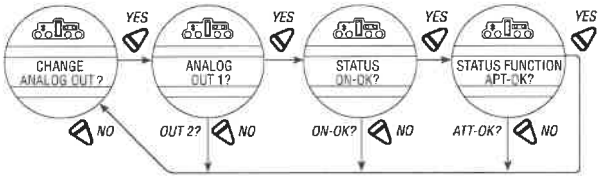

Figure 4.24 – Change Analog Out Voltage – APT

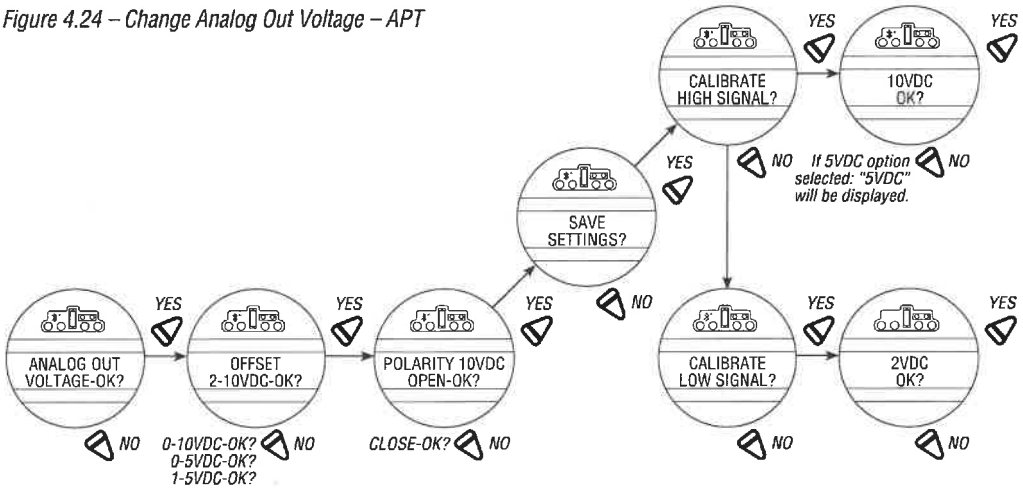

Figure 4.25 – Change Analog Out Current – APT

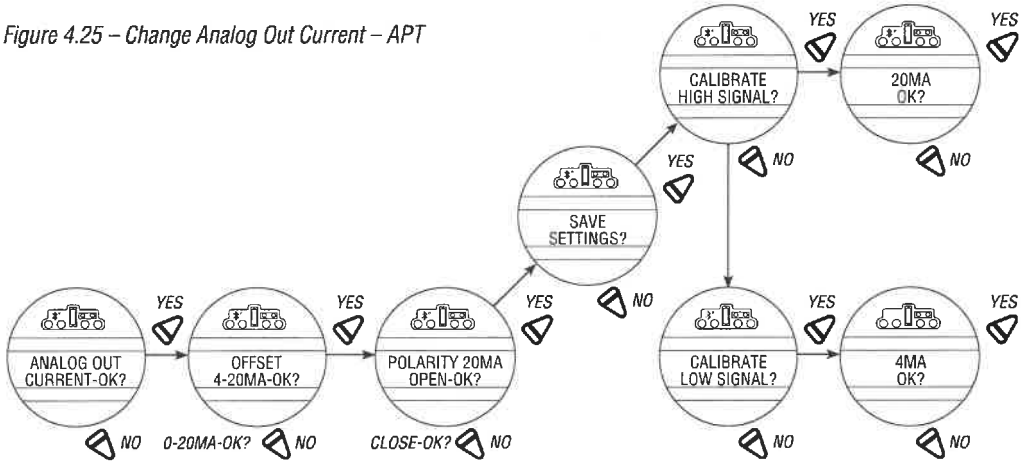

Figure 4.26 – Change Analog Out Voltage – ATT

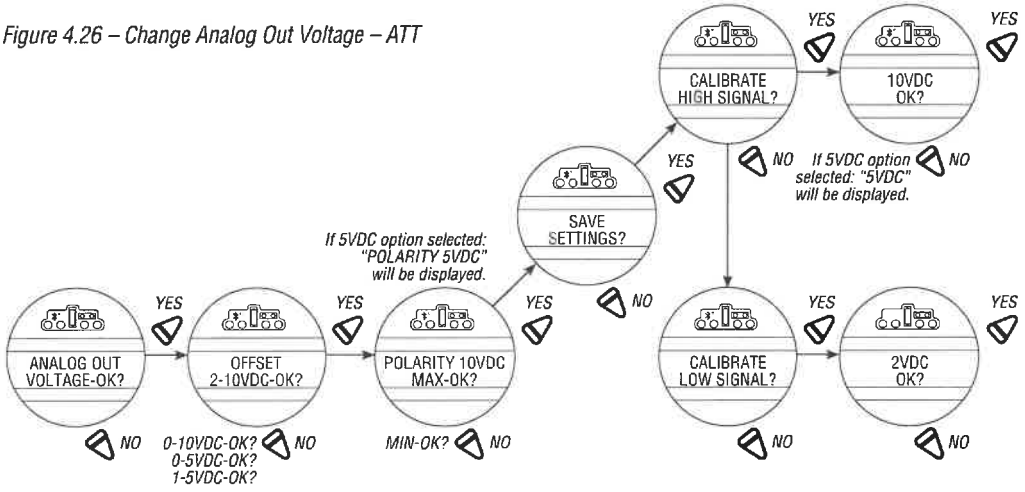

Figure 4.27 – Change Analog Out Current – ATT

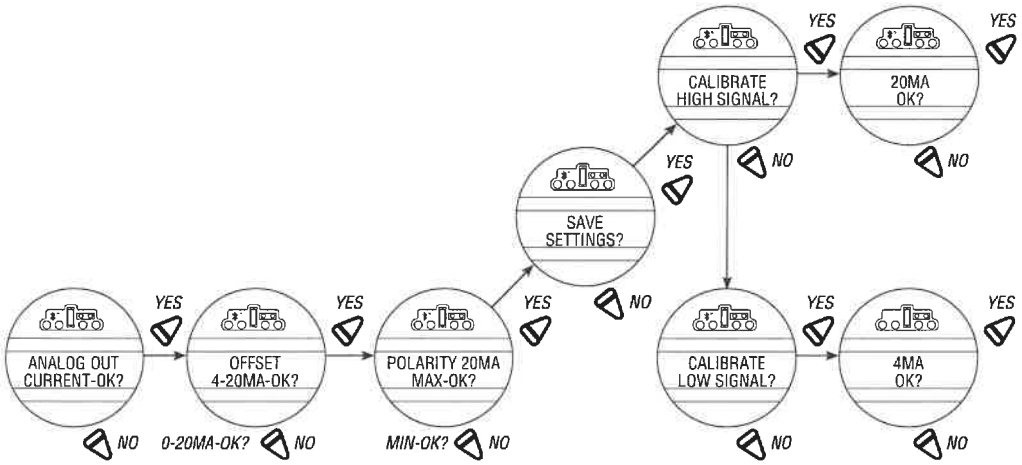

4.17.1 APT Polarity Option

The APT option provides a 4-20 mA feedback signal proportional to valve position. APT is connected at terminals 17 and 18 for 4-20 mA output. Consult actuator wiring diagram for details.

NOTE: If the second analog out option is turned ON but this option was not purchased, the display will show a hardware fault. An optional I/O board is required for this option. To purchase, please contact Limitorque service coordinator at (434) 528-4400.

During position limit calibration (see Section 3.5.4, Setting Position Limits) the APT is automatically calibrated to default settings: Default = 20 mA OPEN, 4 mA CLOSE.

To Customize the Settings:

1. Select "CHANGE APT?" from the "SETUP" routine. Select "YES."
2. Select "NO" to select the status if OFF. If ON, select "YES" to enter the "Status Function APT?" display. Select "NO" to select ATT display.
3. Select "NO" to select 4 ma/0 VDC2. Select "YES" to enter the "POLARITY" display.
4. Select "NO" to choose between:

   20 mA = OPEN

   or

   20 mA = CLOSE
5. Select "NO" to recalibrate new value (low end 3.4-4.5 mA; high end 19.5-21 mA) as shown on meter. New value will not be shown on display.

4.17.2 ATT Polarity Option

The ATT option provides a 4-20 mA signal proportional to actuator output torque and is for reference only. The signal range is from approximately 40% of rated torque to approximately 100% rated torque. This option is connected at terminals 17 and 18 for 4-20 mA output. Consult the actuator wiring diagram for details.

NOTE: If the second analog out option is turned ON but this option was not purchased, the display will show a hardware fault. An optional I/O board is required for this option. To purchase, please contact Limitorque service coordinator at (434) 528-4400.

To Customize the Settings:

1. Select "CHANGE ATT?" from the "SETUP" routine, then "YES" to select ATT status as "ON" or "OFF."
2. Select "NO" to select the status if OFF. If ON, select "YES" to enter the "Status Function?" display. Select "NO" to select ATT display.
3. Select "NO" to select 4 ma/0 VDC2. Select "YES" to enter the "POLARITY" display.
4. Select "NO" to choose between:

   20 mA = OPEN

   or

   20 mA = CLOSE
5. Select "NO" to recalibrate new value (low end 3.4-4.5 mA; high end 19.5-21 mA) as shown on meter. New value will not be shown on display.

4.18 Remote Mode

Remote mode permits a User to select from multiple remote control permissions, or isolate remote control to a single control selection:

- Multi Control mode (default): permits up to three discrete remote inputs: There are three modes of remote control for the QX actuator allowed when the remote mode is configured for multi-control: digital control, analog control, and network control. Digital and network control operation is based on the last command received. Analog control operation in initiated by either toggling user input 2 (configured for CSE input) or breaking and reapplying the analog signal.
- Digital Control Only: the unit will operate only upon the last digital input command received.
- Network Control Only: the unit will operate only upon the last network command received.
- Analog Control only: the unit will operate only upon the last analog input command received.

Figure 4.28 – Remote Mode

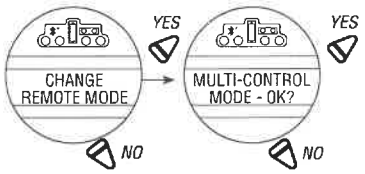

4.19 Local Control

"LOCAL CONTROL" mode changes how the local control switches and display are used from the default settings.

Default = On & Maintain Mode

NOTE: User may select to disable the LOCAL CONTROL, which prohibits the cycling of the QX from OPEN to CLOSE or REVERSE. The LOCAL-STOP-REMOTE knob still functions, which permits the user to re-enter set-up and turn the LOCAL CONTROL back to "ON."

Figure 4.29 – Local control

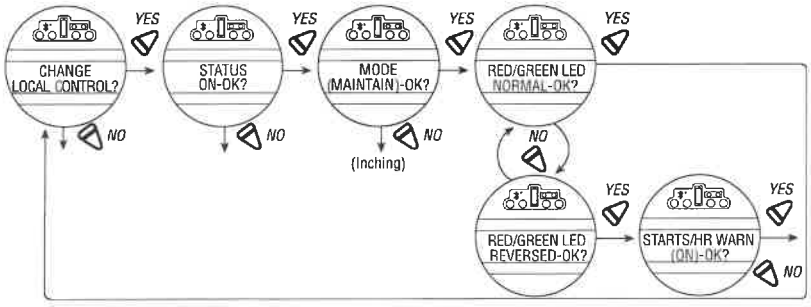

- Maintain mode: the unit will operate continually in either direction when the black knob is actuated and released, until the position of the black knob is changed or the red knob is changed from "LOCAL" to either "STOP" or "REMOTE."
- Inching mode: the unit will operate only when the black knob is held in the open or close position. If the black knob is released, the unit will stop.
- User may select to activate modulating "starts per hour" warning which would alert user if the configured "Starts per hour" value is exceeded.
- User may select to activate modulating "starts per hour" warning which would alert user if the configured "Starts per hour" value is exceeded.

To Customize the Settings:

1. Select "CHANGE LOCAL CONTROL?" from the "SETUP" routine.
2. Select "YES" to enter the mode display.
3. Select "NO" to change from Maintain to Inching control.

4.19.1 LED Customization

This selection allows the customer to reverse the colors of the LED in open and close mode from the default setting.

Default = Red-Open/Green-Close

1. After mode selection, select "YES" to change the colors of the LEDs.
2. Select "NO" to change from the default to Red-Close/Green-Open.

4.20 ESD (Emergency Shutdown) Overrides

An external contact may be used to place the actuator in emergency shutdown mode. An ESD contact may be connected to the actuator to override existing command signals and send the valve to a predetermined position.

The ESD Action and Signal presence is selected in Section 4.20, Inputs. The default ESD input = Input 0., pt. 30 on wiring diagram.

4.20.1 ESD Override

It may be desirable that ESD override other events. These events are selectable. The ">" symbol after ESD indicates that ESD will override that particular event. Sections 4.19.2 through 4.19.12 list the choices.

Figure 4.30 – ESD Overrides

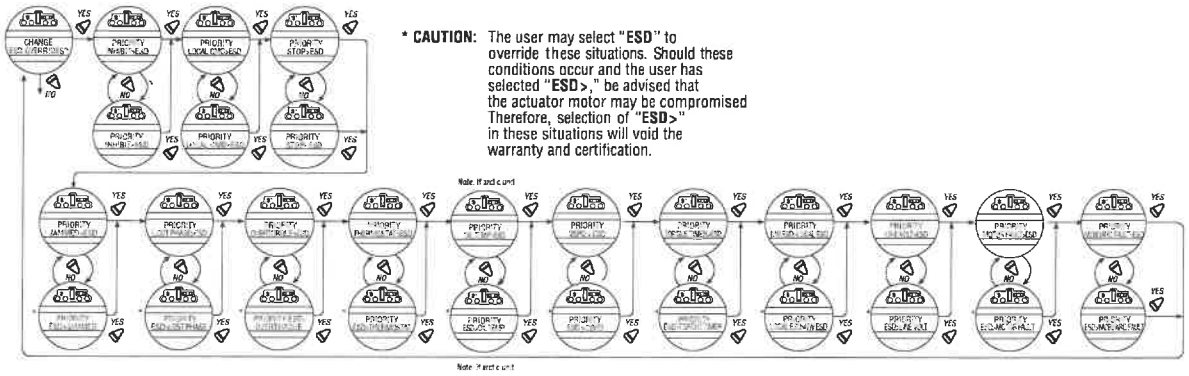

4.20.2 Inhibit

Default = INHIBIT>ESD

To Customize the Settings:
Select "NO" to choose:

- "ESD>INHIBIT" – ESD overrides active inhibit signal
- "INHIBIT>ESD" – Active inhibit signal will override ESD

NOTE: Removing the wires to these terminals can disable active inhibits.

4.20.3 Local Command

Default = LOCAL>ESD

To Customize the Settings:
Select "NO" to choose:

- "ESD>LOCAL" – ESD overrides local command to operate actuator
- "LOCAL>ESD" – Local command to operate actuator overrides ESD

4.20.4 Stop

Default = STOP>ESD

To Customize the Settings:
Select "NO" to choose:

- "ESD>STOP" – ESD overrides stop command
- "STOP>ESD" – Stop command overrides ESD

4.20.5 Jammed Valve*

Default = JAMMED VALVE>ESD

To Customize the Settings:
Select "NO" to choose:

- "ESD>JAMMED VALVE" – ESD overrides jammed valve indication
- "JAMMED VALVE>ESD" – Jammed valve indication overrides ESD (default)

** See CAUTION on Figure 4.29.*

4.20.6 Lost Phase*

Default = LOST PHASE>ESD

To Customize the Settings:
Select "NO" to choose:

- "ESD>LOST PHASE" – ESD overrides lost phase indication
- "LOST PHASE>ESD" – Lost phase indication overrides ESD

** See CAUTION on Figure 4.29.*

4.20.7 Overtorque*

Default = OVERTORQUE>ESD

To Customize the Settings:
Select "NO" to choose:

- "ESD>OVERTORQUE" – ESD overrides overtorque situation
- "OVERTORQUE>ESD" – Overtorque situation overrides ESD

** See CAUTION on Figure 4.29.*

4.20.8 Motor Thermostat

Default = ENABLED

To Customize the Settings:
Select "NO" to choose:

- "ESD >THERMOSTAT" – ESD overrides Motor Thermostat tripped
- "THERMOSTAT > ESD" – Motor Thermostat tripped overrides ESD

NOTE: Disabling the motor thermostat voids all third party certifications including Factory Mutual, CSA, ANZex, and ATEX. Disabling the motor thermostat removes protection from overheating the motor and may cause unsafe conditions.

4.20.9 Oil Over Temperature

Default = OIL OVERTEMP>ESD

To Customize the Settings:

Select "NO" to choose:

- "ESD>OIL OVERTEMP"– ESD overrides high oil temperature
- "OIL OVERTEMP>ESD" – High oil temperature overrides ESD

4.20.10 Two-Speed Timer

Default = 2SPD > ESD

To Customize the Settings:
Select "NO" to choose:

- "ESD > 2SPD" - ESD overrides 2 speed timer
- "2SPD > ESD" - 2 speed timer overrides ESD

4.20.11 Network ESD

Default = Local ESD > NW ESD

To Customize the Settings:

Select "NO" to choose:

- "NW ESD > LOCAL ESD" - Network ESD overrides Local ESD
- "LOCAL ESD > NW ESD" - Local ESD overrides Network ESD

4.20.12 Torque Switch Timer

Default = TORQUE TIMER>ESD

To Customize the Settings:

Select "NO" to choose:

- "ESD>TORQUE TIMER" - ESD overrides torque switch timer
- "TORQUE TIMER>ESD" - Torque

4.21 Inputs

The User can select up to 3 Inputs (0, 1, 2) and configure them to perform these functions:

- ESD
- Inhibits
- User defined
- CSE

NOTE: Input 0 Default: The default for input 0 will be ESD, signal present, disabled, and ignore.

Input 1 Default: The default for input 1 will be open inhibit, signal present, and disabled.

Input 2: The default for input 2 will be close inhibit, signal present, and disabled.

The inputs will be the same as in previous versions of software. If a firmware upgrade is done from a previous version that did not have configurable inputs, to the later version that does, then the users settings will remain the same.

4.21.1 Input Standard Remote Control

The actuator may be controlled remotely by two, three, or four wires, depending on the connections made in the terminal compartment of the actuator. Configuration is required during actuator setup.

This setting allows the user to change the mode of remote control from the default setting:

Default = Three-wire Maintain Control

1. Select "CHANGE REMOTE CONTROL?" from the "SETUP" routine.
2. Select "YES" to enter the display that indicates the type of remote control selected.
3. Select "NO" until the required control is displayed. The selections available are:
   - Three-wire Maintain Control (default except Modutronic)
     Requires two maintained contacts for self-maintained control in OPEN or CLOSE direction.

- Three-wire Inching Control
  Requires two momentary contacts to OPEN or CLOSE the valve, or STOP it in mid-travel.
- Two-wire Control
  Requires one NO or NC contact. Select "YES" for either. Valve OPENS if signal "ON."
  or Valve OPENS if signal "OFF."
- Four-wire Control

4.21.2 Status

Default Setting is: OFF

Select "NO" to choose whether the inhibit is "ON" or "OFF."

Figure 4.31– Inputs

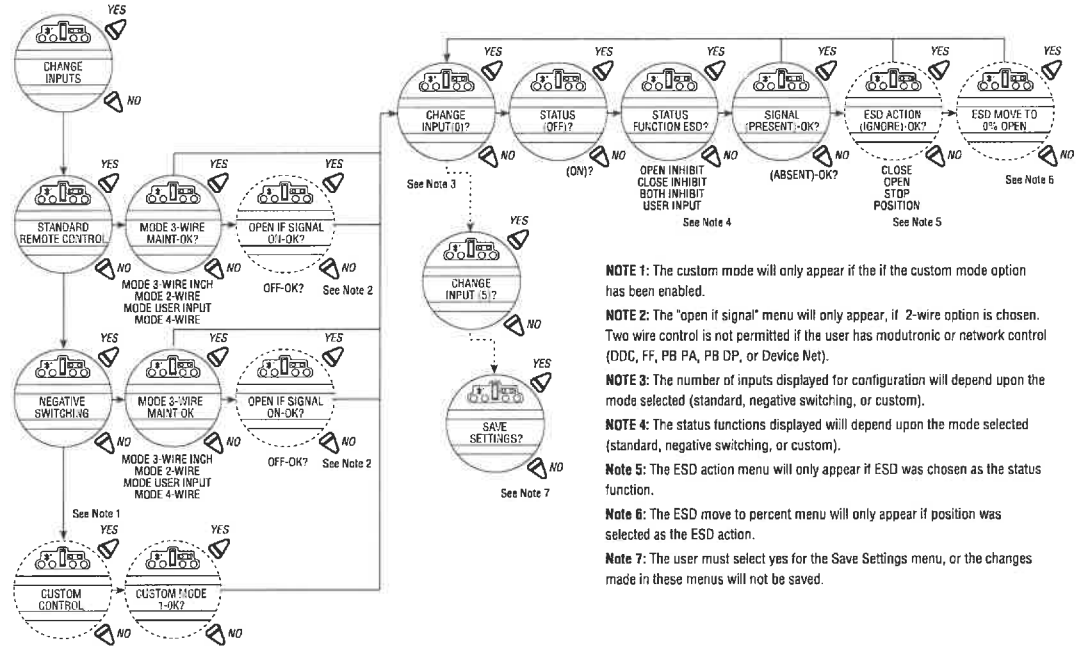

NOTE 1: The custom mode will only appear if the if the custom mode option has been enabled.

NOTE 2: The "open if signal" menu will only appear, if 2-wire option is chosen. Two wire control is not permitted if the user has modutronic or network control (DDC, FF, PB PA, PB DP, or Device Net).

NOTE 3: The number of inputs displayed for configuration will depend upon the mode selected (standard, negative switching, or custom).

NOTE 4: The status functions displayed will depend upon the mode selected (standard, negative switching, or custom).

Note 5: The ESD action menu will only appear if ESD was chosen as the status function.

Note 6: The ESD move to percent menu will only appear if position was selected as the ESD action.

Note 7: The user must select yes for the Save Settings menu, or the changes made in these menus will not be saved.

4.21.3 Custom Input Mode #1 – Momentary ESD/PSESD (Optional)

Custom software is available for the QX that permits the User to establish certain performance characteristics for partial stroke (PS) testing and momentary contact closure ESD.

NOTE: These three inputs are normally configurable. However, when this custom mode is enabled, they are set to the predefined configuration and cannot be changed by the customer.

Input 0 (normal default – ESD) terminal 30:

- Set as disabled, user input function, signal present

Input 1 (normal default – Open Inhibit) terminal 34:

- Set as enabled, partial stroke enable function, signal present = active

Input 2 (normal default – Close Inhibit) terminal 35:

- Set as enabled, partial stroke enable function, signal absent = active

The partial stroke enable signals are setup as redundant signals for safety. There are two signal inputs, and BOTH must be in the active state. If the partial stroke enable inputs are in the active state, and an input is detected (>800 ms) on the momentary ESD/PSESD input, then a partial stroke ESD test will be run. If the partial stroke enable inputs are not active or in a fault state, and an input is detected on the momentary ESD/PSESD input, then the ESD will be latched in and the actuator will perform ESD until the ESD Release is given.

NOTE: These three inputs are the normal open-close-stop inputs. When this custom mode is enabled, they are set to the predefined configuration and cannot be changed by the customer. The only change the customer can make is to set the momentary ESD action (if action is position – then also the target value for the ESD) and the partial stroke target value.

Input 3 (normal default – stop) terminal 26:

- Set as enabled, ESD release function, signal absent = active

Input 4 (normal default – open) terminal 25:

- Set as enabled, ESD Release function, signal present = active

Input 5 (normal default – close) terminal 27:

- Set as enabled, momentary ESD/PSESD function, signal present > 800 ms = active, ESD action = Close, partial stroke target position = 0% open

The ESD release signals are setup as redundant signals for safety. There are two signal inputs, and BOTH must be in the active state. If there is an active ESD and both ESD release inputs are in the active state, the ESD will be unlatched and the unit will return to normal operation. If the ESD release inputs are in a fault state, an active ESD will NOT be released. The ESD release inputs will have no effect on a partial stroke ESD test. The momentary ESD/PSESD input will be ignored if there is a signal present for less than 100 ms, and is guaranteed to latch in the ESD/PSESD if the signal is present for greater than 800 ms. Once the ESD is latched in, the unit will perform the ESD action. In this case the ESD will move the unit to the close limit and remain in ESD mode until the ESD release indication is given using the ESD release inputs.

Figure 4.32 – Custom Input Mode

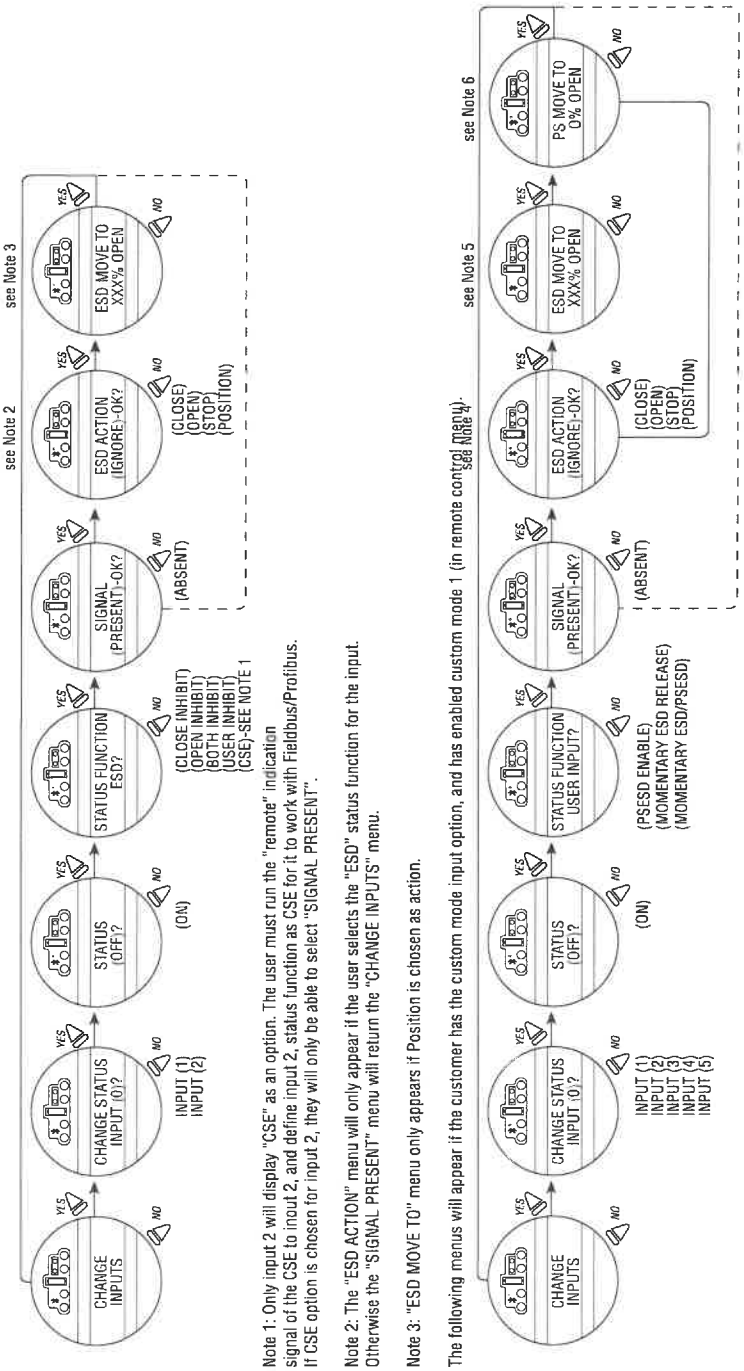

Note 1: Only input 2 will display "CSE" as an option. The user must run the "remote" indication signal of the CSE to input 2, and define input 2, status function as CSE for it to work with Fieldbus/Profibus. If CSE option is chosen for input 2, they will only be able to select "SIGNAL PRESENT".

Note 2: The "ESD ACTION" menu will only appear if the user selects the "ESD" status function for the input. Otherwise the "SIGNAL PRESENT" menu will return the "CHANGE INPUTS" menu.

Note 3: "ESD MOVE TO" menu only appears if Position is chosen as action.

The following menus will appear if the customer has the custom mode input option, and has enabled custom mode 1 (in remote control menu).

Note 4: The "ESD ACTION" menu will only appear if the status function for the input is "MOMENTARY ESD/PSESD". Otherwise the "SIGNAL PRESENT" menu will return to the "CHANGE INPUTS" menu.

Note 5: The "ESD MOVE TO" menu only appears if position is chosen as action .

Note 6: "PS MOVE TO" menu only appears if the status function of the input is "MOMENTARY ESD/PSESD".

The user will only be able to change the ESD ACTION (and ESD MOVE TO target if ESD action is position, and the PS MOVE TO settings when in this special custom mode 1. Following are the preconfigured settings for each input.

Input 0: off, user input, signal present
Input 1: off, psesd enable, signal present
Input 3: on, momentary esd release, signal present
Input 4: on, momentary esd release, signal present
Input 5: on, momentary esd/psesd, signal present, esd action close, ps move to target 0%

4.21.4 Custom Input Mode #2 – Momentary ESD/CSE (Optional)

Custom software is available for the QX that permits the user to establish certain performance characteristics momentary contact closure ESD and 4-wire remote control.

NOTE: These three inputs are normally configurable, however, when this custom mode is enabled, they are set to the predefined configuration and cannot be changed by the customer.

Input 0 (normal default – ESD) terminal 30:

- Set as remote stop

Input 1 (normal default – Open Inhibit) terminal 34:

- Set as remote close

Input 2 (normal default – Close Inhibit) terminal 35:

- Set as remote open

NOTE: These three inputs are the normal open-close-stop inputs. When this custom mode is enabled, they are set to the predefined configuration and cannot be changed by the customer. The only change the customer can make is to set the momentary ESD action (if action is position – then also the target value for the ESD).

Input 3 (normal default – Stop) terminal 26:

- Set as enabled, ESD release function, signal absent = active

Input 4 (normal default – Open) terminal 25:

- Set as enabled, ESD Release function, signal present = active

Input 5 (normal default – Close) terminal 27:

- Set as enabled, momentary ESD function, signal present > 800 ms = active, ESD action = Close.

The ESD release signals are setup as redundant signals for safety. There are two signal inputs, and BOTH must be in the active state. If there is an active ESD and both ESD release inputs are in the active state, the ESD will be unlatched and the unit will return to normal operation. If the ESD release inputs are in a fault state, an active ESD will NOT be released. The ESD release inputs will have no effect on a partial stroke ESD test. The momentary ESD input will be ignored if there is a present for less than 100 ms, and is guaranteed to latch in the ESD if the signal is present for greater than 800 ms. Once the ESD is latched in, the unit will perform the ESD action. In this case the ESD will move the unit to the close limit and remain in ESD mode until the ESD release indication is given using the ESD release inputs.

4.21.5 Custom Input Mode #3 – ESD Time Delay Relay

Custom software is available for the QX that permits the User to establish certain performance characteristics for ESD.

NOTE: These three inputs are normally all configurable. However, when this custom mode is enabled, the customer still retains the ability to change inputs 1 and 2 to their choosing, but Input 0 will always remain ESD. The timer is default 0-30 min (30 sec increment with default 0 sec).

Input 0 (normal default – ESD) terminal 30:

- Set as enabled, ESD, 0 sec Delay(default), Signal present = active, ESD action Close

Input 1 (normal default – Open Inhibit) terminal 34:

- Set as enabled, User Input, Signal present = active

Input 2 (normal default – Close Inhibit) terminal 35:

- Set as enabled, User Input, Signal present = active

The ESD Time Delay Relay input (input 0) functions like any normal ESD input signal. Only if a time has been entered into the Delay Timer value then the unit will not act on that ESD for that delayed amount of time. If the ESD signal is removed, then the timer is canceled and will start fresh with the next assertion. You cannot change that Input 0 is ESD, but it can be enabled/disabled, set to signal present/absent, or you can change the ESD action.

NOTE: These three inputs are kept as open-stop-close inputs. When the custom mode is enabled, the wire mode is preset to 4-wire control and cannot be altered.

Input 3 (normal default – Stop) terminal 26

Input 4 (normal default – Open) terminal 25

Input 5 (normal default – Close) terminal 27

- Set as enabled, User Input, Signal present = active

4.21.6 Custom Input Mode #4 - Multi-Position Mode (optional)

Custom software is available for the MX that permits the User to establish certain performance characteristics for Multi Position controls for remote and local operations.

Input 0 (normal default - ESD) terminal 30:
- Set as enabled MI Move To, signal present = active

Input 1 (normal default - Open Inhibit) terminal 34:
- Set as disabled, User Input, signal present = active

Input 2 (normal default - Close inhibit) terminal 35:
- Set as disabled, User Input, signal present = active

The custom input Multi Position Mode allows the user to configure up to 2 mid travel stop positions. The user will be able to send the actuator to either of these positions in either remote or local controls. In order to use local controls in multi-mode, that option will need to be selected in the CHANGE LOCAL Control menu. The user can select any of the standard wire controls for inputs 3, 4, and 5 (4-wire, 3- wire Maintain, or 3-wire Inching).

Table 4.1 – Digital Input Terminals

Standard Control											
Mode	**Input 0**		**Input 1**		**Input 2**		**Input 3**		**Input 4**		**Input 5**
2-wire	configurable		configurable		configurable		not used		open		not used
3-wire inch	configurable		configurable		configurable		not used		open		close
3-wire maint	configurable		configurable		configurable		not used		open		close
4-wire	configurable		configurable		configurable		stop		open		close
User Input	configurable		configurable		configurable		user input		user input		user input
Terminal connections											
Input 0		Input 1		Input 2		Input 3		Input 4		Input 5	
+VDC	-VDC	+VDC	-VDC	+VDC	-VDC	+VDC	-VDC	+VDC	-VDC	+VDC	-VDC
30	32 or 33	34	29 or 31	35	29 or 31	26	28	25	28	27	28
Jumpers can be used to connect the digital commons as need. 28 to 29, 31 to 32, 33 to VDC source common.											

Negative Switching (Positive Earth)						
Mode	**Input 0**	**Input 1**	**Input 2**	**Input 3**	**Input 4**	**Input 5**
2-wire	configurable	open	not used	configurable	not used	not used
3-wire inch	close	open	not used	configurable	not used	not used
3-wire maint	close	open	not used	configurable	not used	not used
4-wire	close	open	not used	stop	not used	not used
User Input	configurable	configurable	not used	configurable	not used	not used
Terminal connections						

Input 0		Input 1		Input 2		Input 3		Input 4		Input 5	
+VDC	-VDC	+VDC	-VDC	+VDC	-VDC	+VDC	-VDC	+VDC	-VDC	+VDC	-VDC
30	32	34	29	N/A	N/A	26	28	N/A	N/A	N/A	N/A

Custom Modes						
Mode	Input 0	Input 1	Input 2	Input 3	Input 4	Input 5
1	forced to user input if signal present	PS Enable 1	PS Enable 2	ESD Release 2	ESD Release 1	MO ESD/PSESD
2	stop	close	open	ESD Release 2	ESD Release 1	MO ESD
3	ESD TDR	configurable	configurable	stop	open	close

(MO - momentary signal)

Terminal connections

Input 0		Input 1		Input 2		Input 3		Input 4		Input 5	
+VDC	-VDC	+VDC	-VDC	+VDC	-VDC	+VDC	-VDC	+VDC	-VDC	+VDC	-VDC
30	32 or 33	34	29 or 31	35	29 or 31	26	28	25	28	27	28

Jumpers can be used to connect the digital commons as need. 28 to 29, 31 to 32, 33 to VDC source common.

4.22 Monitor Relay

The monitor relay indicates the actuator is available for remote operation. The monitor relay will de-energize on loss of power or if any of the following functions become active:

- Lost Phase
- Valve Jammed
- Motor Overtemp
- Line Voltage Too Low
- Motor Fault
- Motor Controller Board Fault
- Oil Temperature Too High (Arctic Unit)

Normal operation

Each selection is User configurable. Select "Enabled" to turn the feature on, and "Disabled" to turn the feature off.

- "LOCAL STOP/OFF" – Red selector knob in "STOP/OFF"
- "LOCAL SELECTED" – Red selector knob in "LOCAL"
- "TORQUE TIMER" - if enabled

Fault indication

Each selection is User configurable. Select "Enabled" to turn the feature on, and "Disabled" to turn the feature off.

- "LOST PHASE" – Single phasing
- "VALVE JAMMED" – Valve cannot move when energized to pull out of valve seat
- "MOTOR OVERTEMP" – Thermistor range exceeded

The yellow LED will blink when monitor relay is de-energized.

Figure 4.33 – Monitor relay

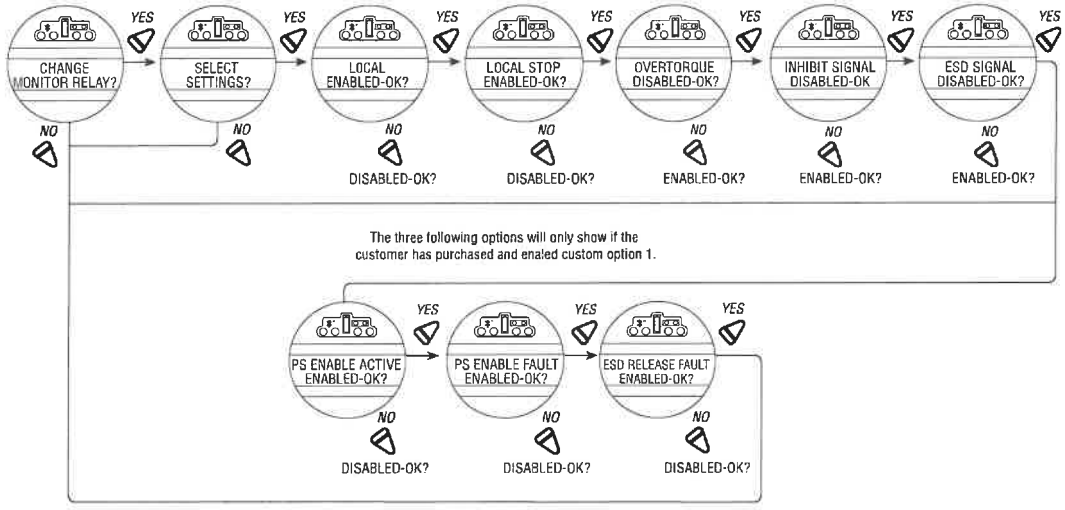

These functions are monitored continuously and may not be changed, but an additional three functions may be configured individually during setup.

1. Select "CHANGE MONITOR RELAY?" from the "SETUP" routine.
2. Select "YES" to enter the "SELECT SETTINGS?" display. Select "YES" to access each of the following three functions:
   - "OVERTORQUE" – Torque range exceeded in mid-travel, thermistor temperature exceeded, or malfunction in thermistor
   - "INHIBIT SIGNAL" – Inhibit "ON" and active
   - "ESD SIGNAL" – ESD "ON" and active
3. Select "NO" to:
   - "ENABLED" – will trip monitor relay
   - "DISABLED" – will not trip monitor relay

4.23 Diagnostic Reset

For diagnostic purposes the following parameters are recorded at certain points in the valve travel on every opening and closing stroke:

- Proportional measurements of torque
- Drive sleeve turns
- Contactor operations
- Maximum and minimum voltage
- Motor run time
- Stroke time

To enable the new values to be compared with previous measurements, it is essential to record reference values. Limitorque recommends this be done after the valve has been installed, commissioned, and is operating under normal

process conditions, and after a plant shutdown or actuator/valve overhaul. The user may select to reset the torque profile at any time.

1. Select "RESET TORQUE PROFILE?" from the "RESET DIAGNOSTICS" routine.
2. Select "YES" to enter the "SAVE NEXT CYCLE?" display.
3. Select "NO" to switch the reset ON or OFF.

   After the next complete cycling of the valve, in both the open and close directions, this reset will automatically be switched OFF.
4. Select "RESET COUNTERS" to reset all the listed parameters to "0."

Figure 4.34 – Diagnostic reset

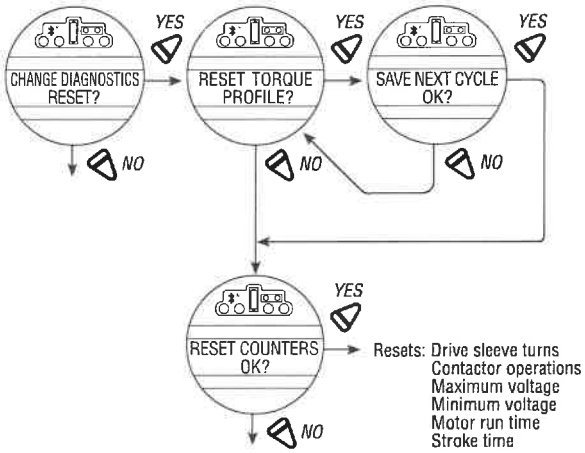

4.24 TAG Number

Defaults to blanks.

To Customize the Setting:

1. Select "CHANGE TAG?" from the "SETUP" routine.
2. Select "YES" to enter the "ENTER DIGIT" displays.
3. Select "NO" to choose the required number or letter for each digit of the valve tag number, up to a maximum number of 16 digits.

   The alphanumeric display scrolls from a symbol set, numerals and then A-Z in the following order: ! " # $ % @ ' ( ) * + , - . / 0-9 : ; < = > ? A-Z. There is one blank at each end to enable a tag number with less than 16 digits to be entered clearly. To highlight the digit being entered, a dot appears over the space and the letter above the space disappears.

Figure 4.35 – TAG number

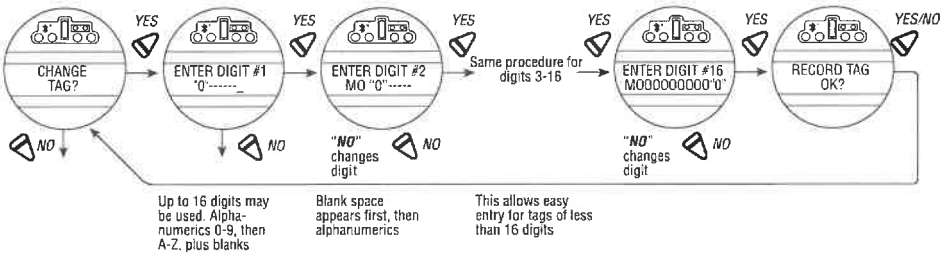

4.25 LCD Contrast

Permits adjustment of the viewing contrast of the LCD.

1. Select "YES" to enter the "LCD CONTRAST" display.
2. Select "NO" to adjust contrast to desired level.

Figure 4.36 – LCD contrast

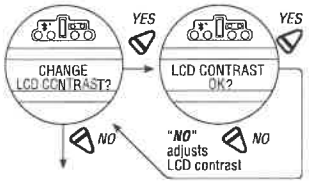

4.26 Motor Thermostat

The thermostat setting may be customized:

1. Select "CHANGE MOTOR THERMOSTAT?" from the "SETUP" routine.
2. Select "YES" to enter the "MOTOR THERMOSTAT" display.
3. Select "NO" to choose between "ENABLED" and "DISABLED."

In the "DISABLED" mode, the motor thermostat is bypassed and detection of an overheated motor does not prevent operation of the actuator. This feature is user-selected when required by the application and may be desirable during critical service.

NOTE: If the motor thermostat is disabled, third party certification including Factory Mutual, FM Canada, IECEx, ATEX and warranty, will be voided.

Figure 4.37 – Motor Thermostat

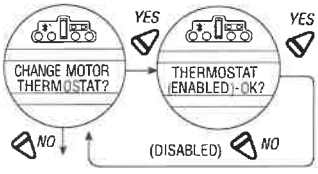

4.27 Change Valve Data

"Change Valve Data" allows the user to identify the type of valve the QX actuator is mounted to.

- Select "YES" to "Change Valve S/N?" Then select "YES" to "ENTER DIGIT" displays.
- Select "NO" to choose the required number or letter for each digit of the valve S/N, up to a maximum of 16 digits.
- Select "YES" when the desired number or letter is displayed. When all digits have been entered select "YES" to "RECORD S/N OK?"

- Follow same sequence for "CHANGE VALVE MODEL #?", "CHANGE VALVE TYPE?"
- If "YES" to "CHANGE VALVE TYPE?" then "VALVE TYPE UNDEFINED-OK?" is displayed. "VALVE TYPE UNDEFINED-OK?" is only shown until the valve type is chosen. In the rare event that the user would need to "REINITIALIZE" the QX actuator, the screen will reappear. See Figure 5.1.
- The alphanumeric display scrolls from a symbol set, numerals and then A-Z in the following order: ! " # $ % & ' ( ) * + , - . / 0-9 : ; < = > @ A-Z. There is one blank at each end to enable a tag number with less than 16 digits to be entered clearly. To highlight the digit being entered, a dot appears over the space and the letter above the space disappears.

Figure 4.38 – Change valve data

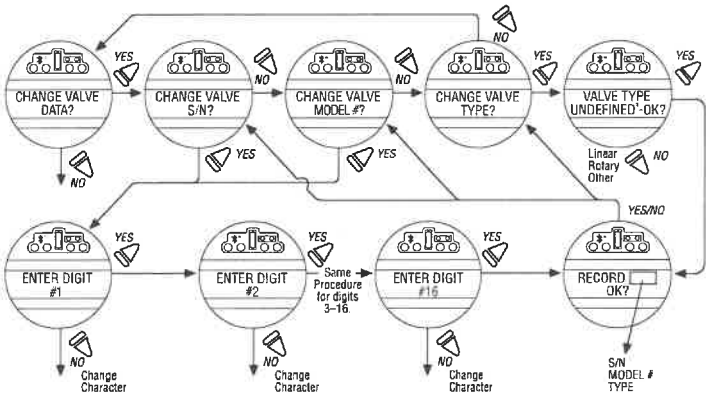

NOTE 1:
Valve type "**UNDEFINED**" is only shown until the valve type is chosen. After that, it will not be displayed again unless Reinitialized.

4.28 Change Port

The QX can have new firmware loaded via the local port connections (refer to wiring diagram) or via the IRdA port, located on the LCD board and accessible via the sight glass. If supplied, enable the optional "Bluetooth Port" for remote configuration and access of Diagnostic information.

Both ports cannot be enabled simultaneously as they both share the same serial port on the main board.

Default = Local Port

Figure 4.39 – Change port and Bluetooth settings

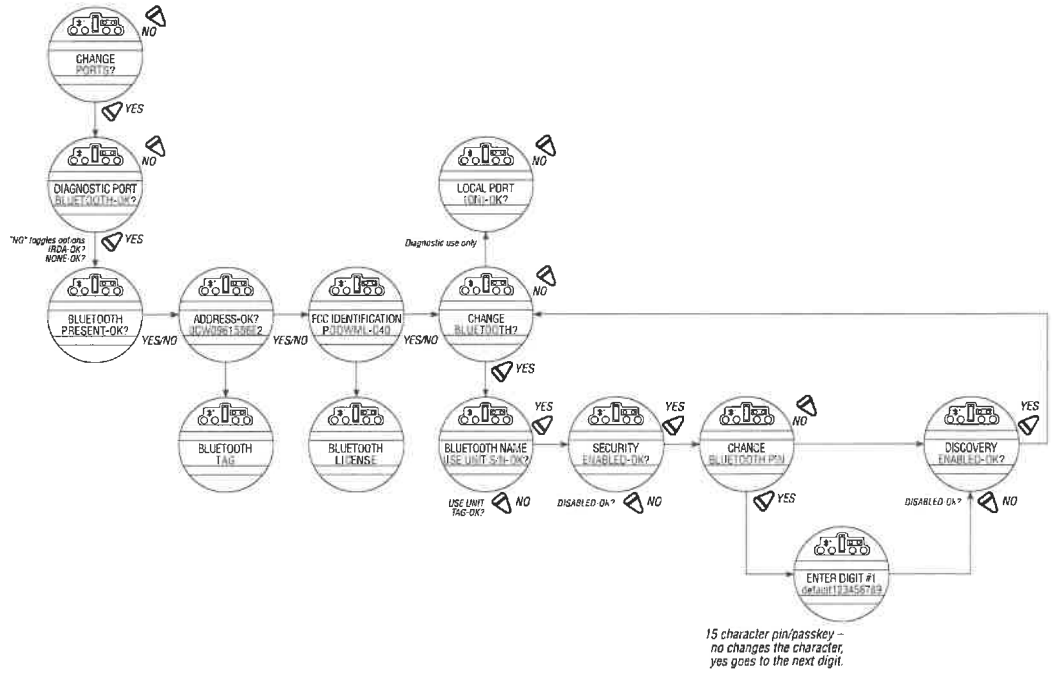

5 Troubleshooting

⚠ **WARNING:** This actuator is non-intrusive. Do not open the control compartment on the actuator unless absolutely necessary. It was sealed in dry, clean conditions in the factory and entry to this compartment should not be necessary. Unauthorized entry could void the warranty.

If the actuator will not operate, before attempting to troubleshoot, verify the following:

- LCD display reads "XX% OPEN," "STATUS OK."
- Red selector switch is not in the STOP position.
- All three phases of the main power supply are present at the actuator terminals.
- The supply voltage is the same as that stated on the actuator nameplate.
- Optional 110 VAC is measured at terminals 23 and 24.
- 24 VDC is measured at terminals 22 (+Ve) and 21.
- If 24 VDC power supply is ON, check that the loading does not exceed 5 W across terminals 21 and 22 (remove wires from 21, 22, 23, and 24).
- LCD and LED display on the control panel are illuminated.

If these checks are satisfactory, then attempt to locate the fault using the "VIEW DIAGNOSTICS" routine. It is also recommended that the actuator settings be verified using "VIEW SETTINGS."

5.1 View Diagnostics Routine

1. Enter "VIEW DIAGNOSTICS" as detailed in Section 5.3, View Diagnostics.
2. Review the various displays to try to find the reason the actuator will not operate. The displays that may help to isolate the fault are as follows:
   - View Hardware Status
   - View Motor Status
   - View Power Supply
   - View Motor Controller Faults

5.2 Troubleshooting Problems/Corrective Action

(Refer to LMENIM3314, QX Maintenance and Spare Parts and the standard wiring diagram in the Section 3.3, Electrical Connections). We recommend that only Limitorque service personnel perform this operation.

1. Switch off the main power supply and 24 VDC supply at terminals 6 and 7 (if used).
2. Remove control compartment cover (ACP) and protect against the ingress of moisture or dust.

3. Remove any wiring that has been connected to terminals 21, 22, 23 and 24.4. Switch on main power supply.
5. Measure VAC at 23, 24 – should be 110 VAC if actuator is supplied with optional 110 VAC circuit. If no power, check fuses FS1, FS2 (600 VAC, 1 A, fast acting, 10.3 x 38.1 mm tube) and FS3 (250 VAC, 0.1A, time delay, 5 x 20 mm glass tube) and replace if necessary. If replacing fuses does not fix the problem, replace damaged board. Contact Limitorque Service at (434) 528-4400.
6. Measure VDC at 21, 22 – should be 24 VDC, maximum power of 5 W. If not, replace damaged board.
7. Replace the control compartment cover (ACP).

5.2.1 Actuator Fails to Operate

Actuator Fails to Operate from LOCAL Controls

1. Place the red selector knob in "LOCAL."
2. If motor runs but actuator output does not turn, check that declutch lever has returned to motor operation position.
3. Check LCD display for following alarms:
   - If motor runs but no actuator movement is detected, check if the display says "JAMMED VALVE" and free if necessary.
   - Inhibit signal may be present or absent at the terminals. Check for signal and adjust as necessary. "INHIBIT ACTIVE" appears on display.
   - Thermal overload of the motor may have been detected. Check motor for high temperature. Thermal overload is self-resetting when motor cools. "MOTOR OVERTEMP" appears on the display.
4. Check to see if the position limits are set incorrectly on top of one another. See Section 3.5.4, Setting Position Limits.

Actuator Fails to Operate from REMOTE Controls

1. Check that the actuator will operate from "LOCAL." If not, then carry out the checks described below.
2. Check that the red knob is in "REMOTE."
3. ESD signal may be present or absent at the terminals. Check for signal and adjust as necessary. ("ESD ACTIVE" at display.) If actuator was previously operated in "LOCAL," then the fault is probably in the remote control circuit. Check the integrity of the cabling and that the connections to the terminals are in accordance with the wiring diagram. If motor runs in "LOCAL," but not "REMOTE," adjust ESD to be greater than local ("ESD > LOCAL").
4. Confirm correct monitor relay operation. See Table 3.6.

5.2.2 Jammed Valve Detected

1. Check that position limits have been set correctly. If valve is position-seated, the limits should stop the motor just before the end-of-travel. Recalibrate the position limits if necessary. See Section 3.5.4, Setting Position Limits.
2. Check that torque settings are correct for the valve. Recalibrate if necessary. See Section 4.7, Torque Setup.
3. Check the condition of the valve and lubrication of the valve stem and thrust bearings. The valve may have remained in the same position for a long time and become corroded internally or externally. Engage manual override and employ the handwheel drive to unseat the valve.
4. Verify that the actuator will now operate the valve. Open and close the valve a few times to check for correct operation throughout the travel. See note next page.

NOTE: To free a jammed valve from the "CLOSE" or "OPEN" position, engage manual override and attempt to unseat it using the handwheel drive. If a rising stem valve is jammed in the close position, loosen the fixing bolts that attach the thrust base to the valve. This will release the compression in the drive components and reduce the effort to unjam the valve. Partly open the valve, then retighten the bolts.

5.2.3 Actuator Operates but Does Not Drive Valve

1. Verify that the declutch lever has returned to motor-operated position.
2. Verify that the stem nut is fitted correctly in the actuator base.
3. Verify that the stem nut has sufficient engagement with the valve stem.
4. Verify that the key is fitted in bore/keyway applications.

5.2.4 Valve Does Not Seat Correctly

1. Verify that position limits are calibrated correctly for the valve travel.
2. Verify that the torque-seating valves have been configured to close on torque, not position.
3. Verify that closing torque value has been set high enough to suit the process conditions.
4. Verify that the valve is not obstructed.

5.2.5 Status Messages

Normal display status is listed in Section 3.6.5, Local Indication. Status or alarm messages are listed below. Once a status or alarm condition occurs, the message will be displayed on the bottom line of the Local Control Station (LCS) screen until the condition is addressed and cleared. If multiple status or alarm conditions are active, the bottom display will cycle through each screen until the condition is addressed and cleared (one message per four seconds).

Status or Alarm Messages (XX = Input # (0, 1, 2))

"---% OPEN, STATUS OK" – Normal display

"---% OPEN, VALVE JAMMED" – Valve cannot start moving

"---% OPEN, LOST PHASE" – One of three phases lost

"---% OPEN, MOTOR OVERTEMP" – Thermistor range exceeded

"---% OPEN, OVERTORQUE" – Torque exceeded in mid-travel

"---% OPEN, HARDWARE FAILURE" – Indication that hardware failed

"---% OPEN, DDC OFF" – DDC enabled, but "OFF"

"---% OPEN, ESD ACTIVE" – ESD signal present

"---% OPEN, INHIBIT ACTIVE" – Inhibit signal present

"---% OPEN, FF OFF" – FF enabled but "OFF"

"---% OPEN, PB OFF" – PB enabled but "OFF"

"---% OPEN, DN OFF" – DN enabled but "OFF"

"---% OPEN, WARMING UP" – Warm up delay active (cold temperature option)

"---% OPEN, NO ANALOG SIGNAL" – 4-20 mA signal absent (Mod enabled, red selector switch in "REMOTE")

"---% OPEN, DDC COM LOST" – DDC enabled, signal absent

"---% OPEN, FF COM LOST" – FF enabled, signal absent

"---% OPEN, PB COM LOST" – PB enabled, signal absent

"---% OPEN, DN COM LOST" – DN enabled, signal absent

"---%OPEN, ESD XX ACTIVE" – Input # set for ESD, is asserted, and has highest priority

"---%OPEN, ESD = XXX.X %" = ESD ACTIVE and its action is "move to" ---.-% position

"---%OPEN, ESD XX INHIBITED" – Active ESD XX has been inhibited by an ESD override.

"---%OPEN, ESD XX CONFLICT" – ESD XX is set for ESD, asserted, and is in conflict with the active ESD.

"---%OPEN, ESD OPEN" – active ESD action is OPEN

"---%OPEN, ESD CLOSED" – active ESD action is CLOSED

"---%OPEN, ESD STOP" – active ESD action is STOP

"---%OPEN, ESD IGNORE" – active ESD action is IGNORE

"---%OPEN, INHIBIT ACTIVE" – INHIBIT signal is asserted

"---%OPEN, INHIBIT CONFLICT" – Conflict with multiple INHIBITs

---% OPEN, IDENTICAL LIMITS – Position limits identical preventing operation

---% OPEN, TORQUE TIMEOUT – The torque switch timed out after the actuator determined that it has reached its torque seat

"SET LIMITS" – Normal display if red selector knob is in "LOCAL" or "REMOTE" and position limits have not been set

"INITIALIZE" – "INITIALIZE" will be displayed if module has no actuator configuration. No operation will be permitted until initialization has been completed. Refer to "ROM ERROR" for routine on next page. See Figure 5.1.

"---% OPEN, THERMISTOR" – There is a failure with the motor thermistor

"---% OPEN, KNOBS" – There is a failure with the local knobs

"---% OPEN, DDC NOT PRESENT" – DDC board expected but not found (missing or not communicating)

"---% OPEN, FF NOT PRESENT" – FF board expected but not found

"---% OPEN, PBDP NOT PRESENT" – Profibus DP board expected but not found

"---% OPEN, PBPA NOT PRESENT" – Profibus PA board expected but not found

"---% OPEN, DN NOT PRESENT" – Device Net board expected but not found

"---% OPEN, ANG1 NOT PRESENT" – Analog 1 board expected but not found

"---% OPEN, ANG2 NOT PRESENT" – Analog 2 board expected but not found

"---% OPEN, CONTACTOR" – Contactor failure

"---% OPEN, ENCODER" – Encoder failure

"---% OPEN, R1R4RM RLY FAILED" – R1-R4 board relay check failed

"---% OPEN, R5R8 RLY FAILED" – R5-R8 board relay check failed

"---% OPEN, DDC FAILED" – Communication with the main board failed, or hardware fault

"---% OPEN, FF FAILED" – Communication with the main board failed, or hardware fault

"---% OPEN, PBDP FAILED" – Communication with the main board failed, or hardware fault

"---% OPEN, PBPA FAILED" – Communication with the main board failed, or hardware fault

"---% OPEN, DN FAILED" – Communication with the main board failed, or hardware fault

"---% OPEN, R1R4RM NOT AVAIL" – R1-R4 board expected but not found

"---% OPEN, R5R8 NOT PRESENT" – R5-R8 board expected but not found

"---% OPEN, ENCODER WARNING" – The encoder has not yet failed, but there was a momentary glitch detected. If the glitch persists, encoder failure will be reported.

"---%, OIL OVER TEMP" - Arctic unit oil temperature too high

"---%, HIGH LINE VOLTAGE" - QX Line voltage too high to run safely

"---%, MC COMM LOSS" - QX Communication loss with motor controller board

"---%, MC BOARD FAULT" - QX Motor Controller Board fault

"---%, MOTOR FAULT" - QX Motor Fault

"---%, LOW LINE VOLTAGE" - QX Line Voltage too low to run safely

RAM Error

The QX processor continually checks RAM for memory corruption errors. If corruption is detected, the processor will force a reset to clear RAM. The LCD will temporarily display the following prior to this reset:

"XXX% OPEN"

"RAM ERROR"

After the reset, the display will read normally. Any momentary commands (DDC command, momentary pushbutton, etc.) that were not completely executed must be reissued.

ROM Error

The QX processor continually checks EPROM for memory corruption errors. If corruption is detected, operation is disabled. If the selector switch is in "LOCAL" or "REMOTE," the LCD will display the following:

"XXX% OPEN"

"ROM ERROR"

When the selector is placed in "STOP," the unit will require reinitialization and the LCD will display the following dialog:

Figure 5.1 – Initialize routine

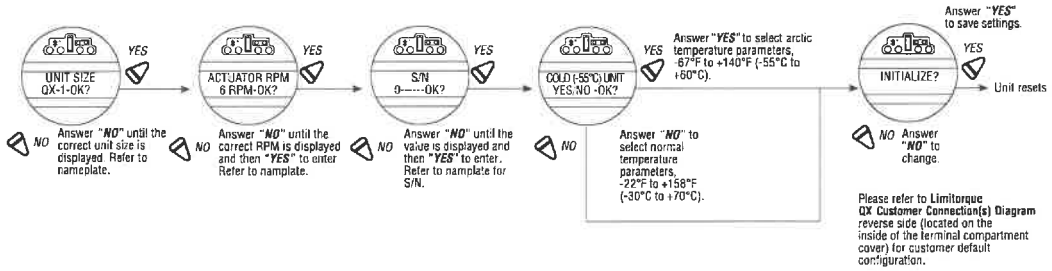

5.3 View Diagnostics

A large amount of historical data is stored in the actuator memory and can be retrieved very easily, without the need for password entry. The data is displayed in dialog format.

1. Enter the "SETUP" mode routine detailed in Section 3.5.3, Entering the Setup Mode.
2. Select "VIEW DIAGNOSTICS?"
3. Select "YES" to access the first display "VIEW HARDWARE?"

NOTE: It is recommended that ALL diagnostics information be recorded prior to contacting an authorized Limitorque service coordinator at (434) 528-4400. This information aids in diagnosing any problem the actuator may experience.

Figure 5.2 – Diagnostic overview

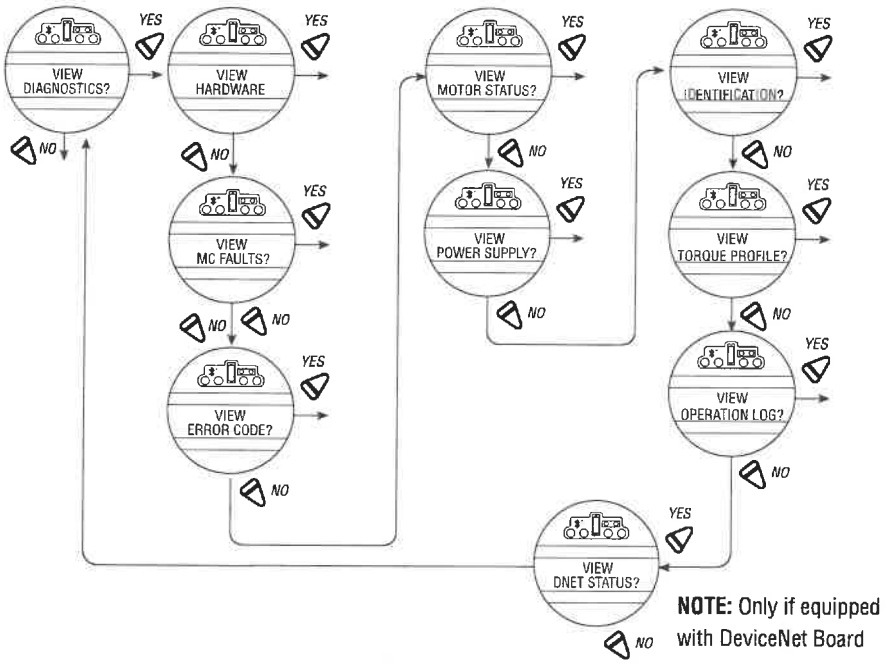

5.4 View Hardware Status

Accessing the "VIEW HARDWARE" routine will enable some of the actuator components to be reviewed for their integrity, as indicated below. These components are continuously being monitored.

Figure 5.3 – View hardware status

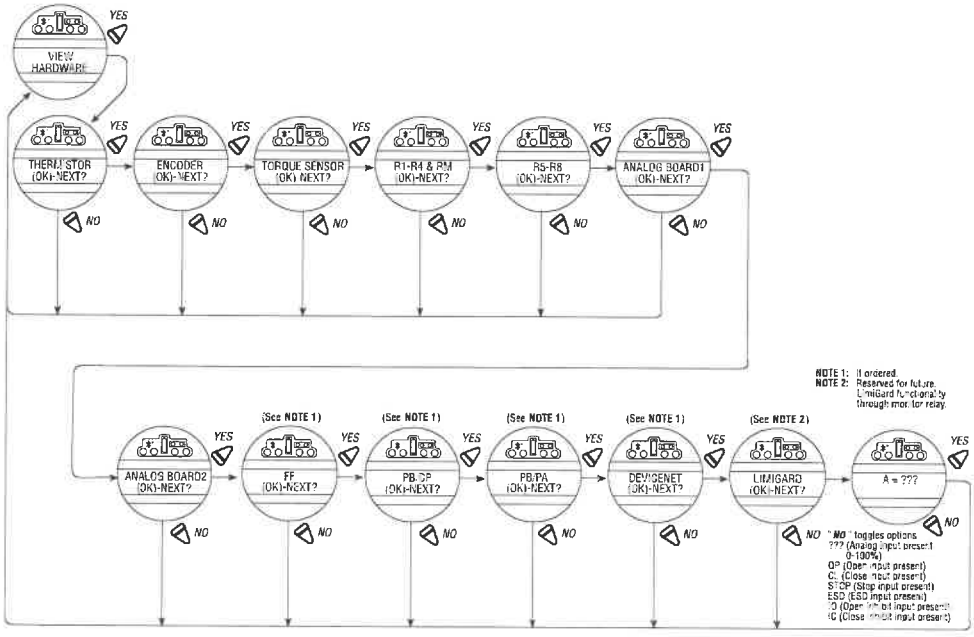

5.5 View Motor Status

Viewing "MOTOR STATUS" will provide information on the following:

- If the three-phase power supply is connected correctly.
- If autophase correction is in operation.
- If there is a fault or loss of a phase.
- Temperature of the windings in the motor..

Figure 5.4 – View motor status

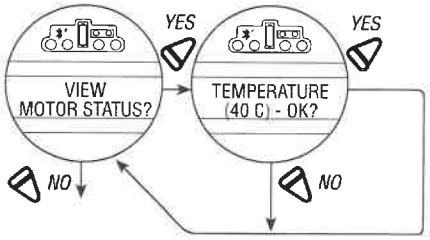

5.6 View Power Supply

Viewing "POWER SUPPLY" will provide historical data on the maximum and minimum voltages that have been applied to the actuator, as well as the frequency of the AC supply. These can be reset. See Section 4.22, Diagnostic Reset.

Figure 5.5 – View power supply

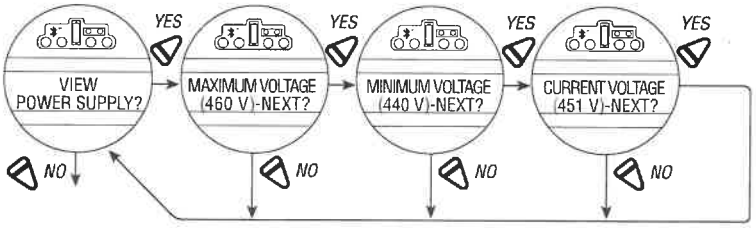

NOTE: Motor temperature and voltage updates every 0.5 seconds.

5.7 View Identification

In this dialog, the identity of the actuator may be reviewed. This dialog provides valuable information for the ordering of spare parts or checking the specification of the actuator.

NOTE: The serial number, order number, and software revision number were entered at the time of manufacture and cannot be changed on screen. The software revision number is necessary when option boards are ordered.

Figure 5.6 – View identification

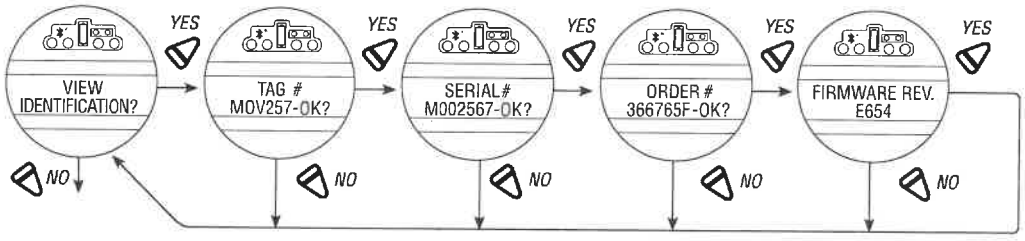

*Network revisions will only be displayed if the optional network board is installed within the QX.

5.8 View Torque Profile

The information contained in the "TORQUE PROFILE" dialog provides indication of the condition of the valve relative to the last time that the "DIAGNOSTIC RESET" reference values were reset. See Section 4.23, TAG Number. It can give an indication of a change in the process conditions, such as an increase in pressure.

Details are given for the REFERENCE and the LAST torque, expressed as a percentage of the rated torque (stated on the nameplate, Figure 4.10) that occurred at BREAKOUT, ENDING, and PEAK RUNNING for both the opening and closing directions. Torque will be expressed proportionally as a reference only from 40% to 100% inclusive. Initial indication may read 0% until torque exceeds 40% minimum.

- "BREAKOUT" – Amount of torque required to unseat the valve.
- "ENDING" – Amount of torque required to seat the valve.
- "PEAK RUNNING" – Maximum torque detected while cycling from BREAKOUT to ENDING. (Maximum mid-travel torque.)

Figure 5.7 – View torque profile

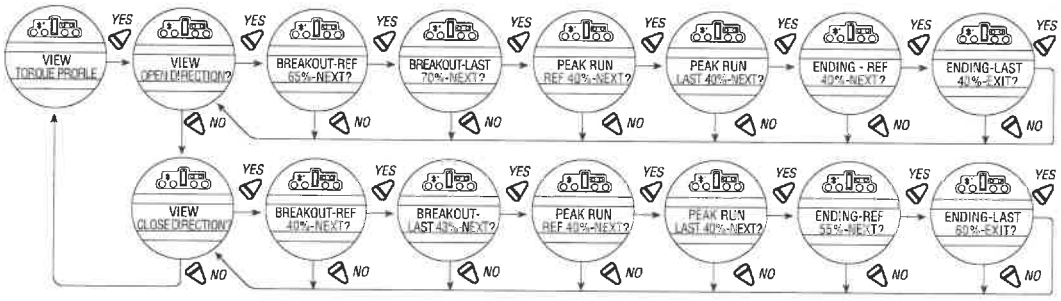

5.9 View Operation Log

The "OPERATION LOG" provides information to assist in the maintenance program for the actuator because it indicates the total number of actuator turns, contactor operations, motor run time, and declutching operations since the actuator was manufactured. These figures may not be reset except in "RESTRICTED SETUP." Contact factory.

The LCD screen definitions are as follows:

- "STROKE TIME" – Length of time of last actuator operation
- "TURNS TOTAL" – Total number of drive sleeve revolutions

- "TURNS RECENT" – Number of drive sleeve revolutions since last diagnostic reset. See Section 4.22, Diagnostic Reset, for reset diagnostics instructions.
- "CONTACTOR OPS" – Total number of contactor operations
- "OPS RECENT" – Number of contactor operations since last diagnostic reset. See Section 4.22, Diagnostic Reset, for reset diagnostics instructions.
- "MOTOR RUN TIME" – Total motor operational time
- "TIME RECENT" – Motor operational time since last diagnostic reset. See Section 4.22, Diagnostic Reset, for reset diagnostics instructions.
- "MOVED MANUAL #" – Total number of times unit has been operated manually
- "MANUAL # RECENT" – Number of times unit has been operated manually since last diagnostic reset. See Section 4.22, Diagnostic Reset, for reset diagnostics instructions.
- "Starts per hour" exceeds count - number of configured st/hr has been exceeded.
- "Starts per hour" exceeds time - number of configured starts in less than an hour has been exceeded.

Figure 5.8 – View operation log

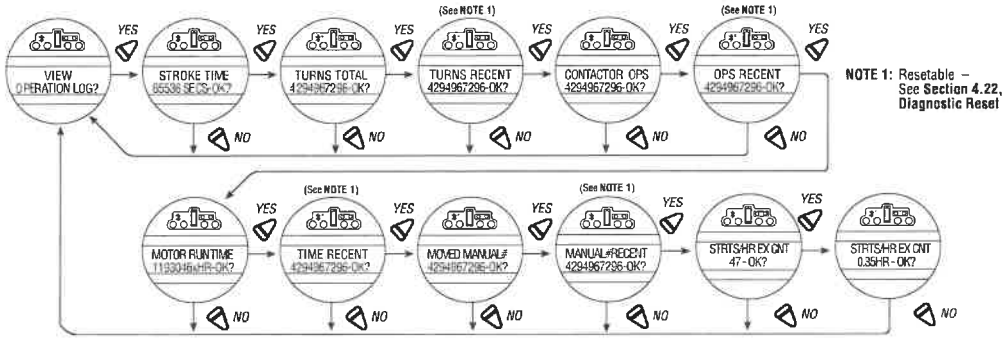

5.10 View DNET Status?

This selection permits the User to view pertinent information that summarizes the status of the DeviceNet option board

Figure 5.9 – View DNET status

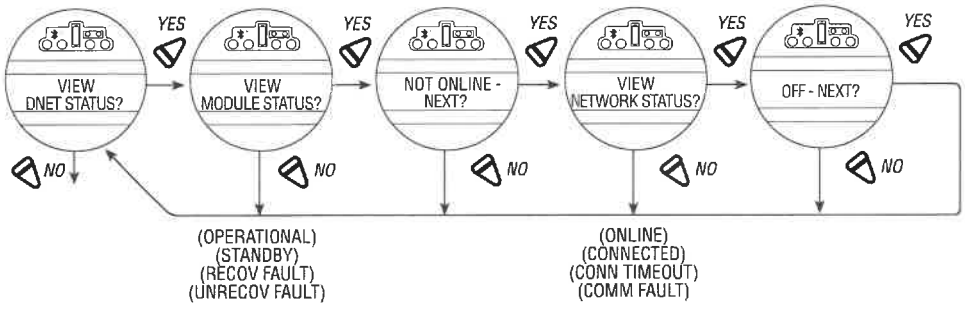

VIEW MODULE STATUS?

Answer "YES" to determine status of individual DN board within the actuator.

Configuration choices are:

"OFF" = Board installed but turned off

"STANDBY" = The device needs commissioning due to configuration missing, incomplete or incorrect.

"RECOVERABLE FAULT" = Conditions that can cause this event are e.g. communication fault, power fault or Limiguard fault of the SMT Main Board. Device may need resetting.

"UNRECOVERABLE FAULT" = Internal Diagnostic Fault detected e.g.

- Receive Queue Overrun
- Transmit Queue Overrun
- CAN Controller Overrun

Device may need replacing.

"SELF TESTING" = The device is in self-test mode.

VIEW NETWORK STATUS?
Answer "YES" to determine status of DN network.

"NOT ON LINE" = Device is not on-line.

- The device has not completed the self-test yet.
- The device may not be powered, look at Module Status Display.

"ONLINE" = Device is on-line but has no connections in the established state.

- The device has passed the SELF test, is on-line, bus has no established connections to other nodes.
- For a Group 2 Only device it means that this device is not allocated to a master.
- For a UCMM capable device it means that the device has no established connections.

"CONNECTED" = The device is on-line and has connections in the established state.

- For a Group 2 Only device it means that the device is allocated to a Master.
- For a UCMM capable device it means that the device has one or more established connections.

"CONN TIMEOUT" = One or more I/O Connections are in the Timed-Out state.

"COMM FAULT" = Failed communication device. The device has detected an error that has rendered it incapable of communicating on the network (Duplicate MAC ID, or Bus-off).

"ID COM FLT REQ" = A specific Communication Faulted device. The device has detected a Network Access error and is in the Communication Faulted state. The device has subsequently received and accepted an Identify Communication Faulted Request. Long Protocol message.

6 Maintenance

Under normal operating conditions, the QX is a maintenance-free actuator. For ordinary applications, the actuator will require no formal maintenance program. However, if the actuator is used under severe service conditions or operated in a Hazardous Location, the following maintenance procedures are required:

1. Check the oil level every 50 hours of operation at a minimum. Where conditions are severe due to frequent operation or high ambient temperatures, a more regular inspection interval should be maintained.
2. Change the gear oil every 100 hours of operation. See Section 6.1, Lubrication.
3. All ball bearings, oil seals, O-rings and quad-rings are to be replaced after 450 hours of operation. See Bulletin LMENIM3314, QX Maintenance and Spare Parts for disassembly procedures.

Clean and lubricate the valve stem regularly to avoid torque build-up and wear due to silting and corrosion. Infrequent operation can lead to corrosion and contamination of the valve stem thread lubricant. Check any thrust bearings that are fitted to the actuator for proper lubrication at regular intervals. For additional details refer to LMENIM3314, QX Maintenance and Spare Parts.

6.1 Lubrication

QX actuators are oil-filled, as standard, using Petro Canada SHB 68. This product is a synthetic machine oil suitable for ambient temperatures of -20°F to 250°F (-30°C to 120°C). For extreme low temperature conditions (< -30°C to -60°C), an alternative lubricant is available—50% Petro Canada SHB 68 with 50% Soltex PAO 4. Consult factory for arctic temperature applications.

6.1.1 Oil Capacities

To avoid pressurization of the gearcase, the following recommended oil capacities should not be exceeded:

Table 6.1 – Oil Capacities

Unit Description	Fluid Ounces	Liters
QX-1/2	26	0.77
QX-3/4/5	80	2.36

6.1.2 Checking Oil Level

To check the level:

1. Remove the uppermost filler plug on the gearcase.
2. Check that the level of oil is within 1 inch (25 mm) of the hole (when actuator is mounted with base horizontal).

7.1 Specific Conditions for Use — Atex/Cenelec/IECEx Applications

7 Regulatory Information

EU Declaration of Conformity

Application of Council Directive(s)

2014/30/EU; EMC Directive
2006/42/EC; Machinery Directive
2014/34/EU; ATEX Directive
2014/35/EU: Low Voltage Directive

Standards to which Conformity is Declared

Machinery, LVD; EN 60204-1:2006+A1:2009

EMC - Emissions:
- EN 61000-6-3:2007+A1:2011
- EN 61000-6-4:2007+A1:2011
- EN 55011:2009+A1:2010
- EN 61326-1:2013

Immunity:
- EN 61000-6-2:2005
- EN 61000-6-1:2007

Airborne Noise; MIL-740-1, EN ISO 1680: 2013(Ref)

ATEX Harmonized Standards

- EN 60079-0:2012
- EN 60079-1:2014
- EN 60079-7:2015
- EN 13463-1:2009
- EN 13463-5:2011
- EN 60529:1991+A1:2000

Materials of Construction

Terminal and Control Covers- Aluminum Alloy 380 or 383
CS Station- Aluminum Alloy 319
Nameplate- Stainless Steel
Housing- 356-T6 Aluminum
Window- Heat Tempered Soda Lime Glass
Antenna Cover- Polytetraflouroethylene

Type and Description of Equipment

Valve Actuators

Model Numbers
QX-1, -2, -3, -4, -5 (Quarter Turn and Multi-Turn Products)
QX Series Note: Tested with Limitorque products only and with standards applicable at the time of testing.

Equipment Marking

II 2 G c
Ex db IIB T6, Tamb = -60°C to +70°C; IP68
Note: Actuators marked with Tamb below -20°C require special construction.

II 2 G c
Ex db IIC T6, Tamb = -20°C to + 70°C; IP68

II 2 G c
Ex db eb IIB T6, Tamb = -20°C to + 60°C; IP68
Note: Group IIC design also available and requires special construction.

Notified Body
FM Approvals Europe Limited,
One Georges Quay Plaza
Dublin, Ireland D02 E440
Notified Body Number 2809

EC Type Examination Certificate
FM09ATEX0058X

Manufacturer's Name
Limitorque, A Division of Flowserve Corporation

Manufacturer's Address
5114 Woodall Rd, Lynchburg, VA 24502 USA

Importer's Name
Flowserve S.r.l.

Importer's Address
Via. Rio Vallone 17
20883 Mezzago (MB)
Italy

I, the undersigned, hereby declare that the equipment specified above conforms to the above Directive(s) and Standard(s).

John Thilking
Sr. Certification Engineer, ATEX/IEC-Ex Authorized Person, Flowserve Limitorque
Date: December 10, 2019
Flowserve Limitorque
5114 Woodall Rd
Lynchburg, VA 24502

Applicable emissions standards	EN61326-1 (CISPR11)	Industrial Environments - Class A - Test Limits & Levels	
Radiated Emissions	EN55011:2009+A1:2010 (CISPR11)	30 MHz to 230 MHz	40 dB (µV/m)
		230 MHz to 1 GHz	47 dB (µV/m)
	FCC Part 15, (CFR47 Part 15.109)	30 MHz to 88 MHz	90 dB (µV/m)
		88 MHz to 216 MHz	150 dB (µV/m)
		216 MHz to 960 MHz	210 dB (µV/m)
		> 960 MHz	300 dB (µV/m)
Conducted Emissions	EN55011:2009+A1:2010 (CISPR11)	150 kHz to 500 kHz	79 dB (µV) (quasi-pk), 66 dB (µV) (avg)
	FCC Part 15, (CFR47 Part 15.107)	500 kHz to 30 MHz	73 dB (µV) (quasi-pk), 60 dB (µV) (avg)
Applicable immunity standards	EN61000-6-2:2005 (Perf. Criteron)	Industrial Environments - Test Limits & Levels	
ESD	IEC61000-4-2 (B)	Contact	±1 kV, ±2 kV, ±4 kV
		Air	±2 kV, ±4 kV, ±6kV, ±8 kV
Radiated RF immunity	IEC61000-4-3 (A)	Enclosure @ 80 MHz to 1 GHz	10 Vrms/m @ 80% AM, 1 kHz
		Enclosure @ 1 GHz to 2.7 GHz	3 Vrms/m @ 80% AM, 1 kHz
		Enclosure @ 2 GHz to 2.7 GHz	1 Vrms/m @ 80% AM, 1 kHz
Fast transients/burst	IEC61000-4-4 (B)	AC Power, DC Power	±2 kV
		I/O (mains connected)	±2 kV
		I/O (non-mains)	±1 kV
Voltage surges	IEC61000-4-5 (B)	AC Power, DC Power	±1 kV (DM), ±2 kV (CM)
		I/O (mains connected)	±2 kV (CM)
		I/O (non-mains)	±1 kV (CM)
Conducted RF immunity	EN61000-4-6 (A)	AC Power, DC Power, I/O @ 150 kHz to 80 MHz	3 Vrms @ 80% AM, 1 kHz
Magnetic field immunity	EN61000-4-8 (A)	Three mounting axis, X, Y, Z	30 A/m, 60 sec dwell
Voltage dips and interrupts	IEC61000-4-11 (B)	3 dips, 10 sec apart	100% dip for 1 cycle @ 50/60 Hz
		3 dips, 10 sec apart	60% dip for 200 ms @ 50/60 Hz
		3 dips, 10 sec apart	30% dip for 500 ms @ 50/60 Hz
	EN61000-4-11 (C)	3 dips, 10 sec apart	100% interrupt for 5 sec @ 50/60 Hz

Atex/Cenelec/IECEx certification of the QX product line is described in Certificate of Conformity. This certificate details specific construction requirements that must be met in order to maintain the XP integrity of the actuator. The socket-head cap screws used with the QX electric valve actuators shall conform to the following requirements:

The "X" suffix to the Certificate number relates to the following specific conditions of use.

1. ISO Class 12.9, M8 socket-head cap screws (Yield Stress 1100 MPa) shall be used to replace the terminal, control, or motor compartment fasteners of actuators marked with TAMB < -20°C or for all Group IIC actuators.
2. Stainless steel, A2 or A4, ISO Class 70, M8 socket-head cap screws (Yield Stress 450 MPa) shall be permitted as an alternate to the ISO Class 12.9 socket-head cap screws on the terminal, control, or motor compartments of actuators marked TAMB ≥ -20°C.
3. Consult the manufacturer if dimensional information on the flameproof joints is necessary.

7.2 Statement of Compliance with Applicable European Directives

We, Flowserve Limitorque, 5114 Woodall Road, Lynchburg, VA, USA 24502, as the manufacturer of the equipment listed below:

> QX-1, 2, 3, 4, 5 electronic valve actuator. The QX is a non-intrusive electronic actuator. It is specifically designed for the purpose of being mounted to a quarter turn valve (or other apparatus) in order to move the valve from fully closed to fully open.

Confirm, in accordance with the requirements of clause 1.2.7 of the Essential Health and Safety Requirements of Community Directive 94/9/EC on equipment and protective systems intended for use in potentially explosive atmospheres that the above equipment has been designed and manufactured to:

a) Avoid physical injury or other harm which may be caused by direct or indirect contact;

b) Assure that the surface temperature of accessible parts or radiation which cause a danger, are not produced;

c) Eliminate non-electric dangers which are revealed by experience;

d) Assure that foreseeable conditions of overload shall not give rise to dangerous situations.

And where these risks are wholly or partly covered by other Community Directives, the equipment satisfies the requirements of those specific Directives.

And that literature describing the equipment will not contradict the instructions with regard to safety aspects.

Issued on: 16 October 2011

Authorized by:

Name: Earnest G. Carey, Jr.

Position: Principal Product Portfolio Manager

Figure 7.1 – Typical ATEX nameplate

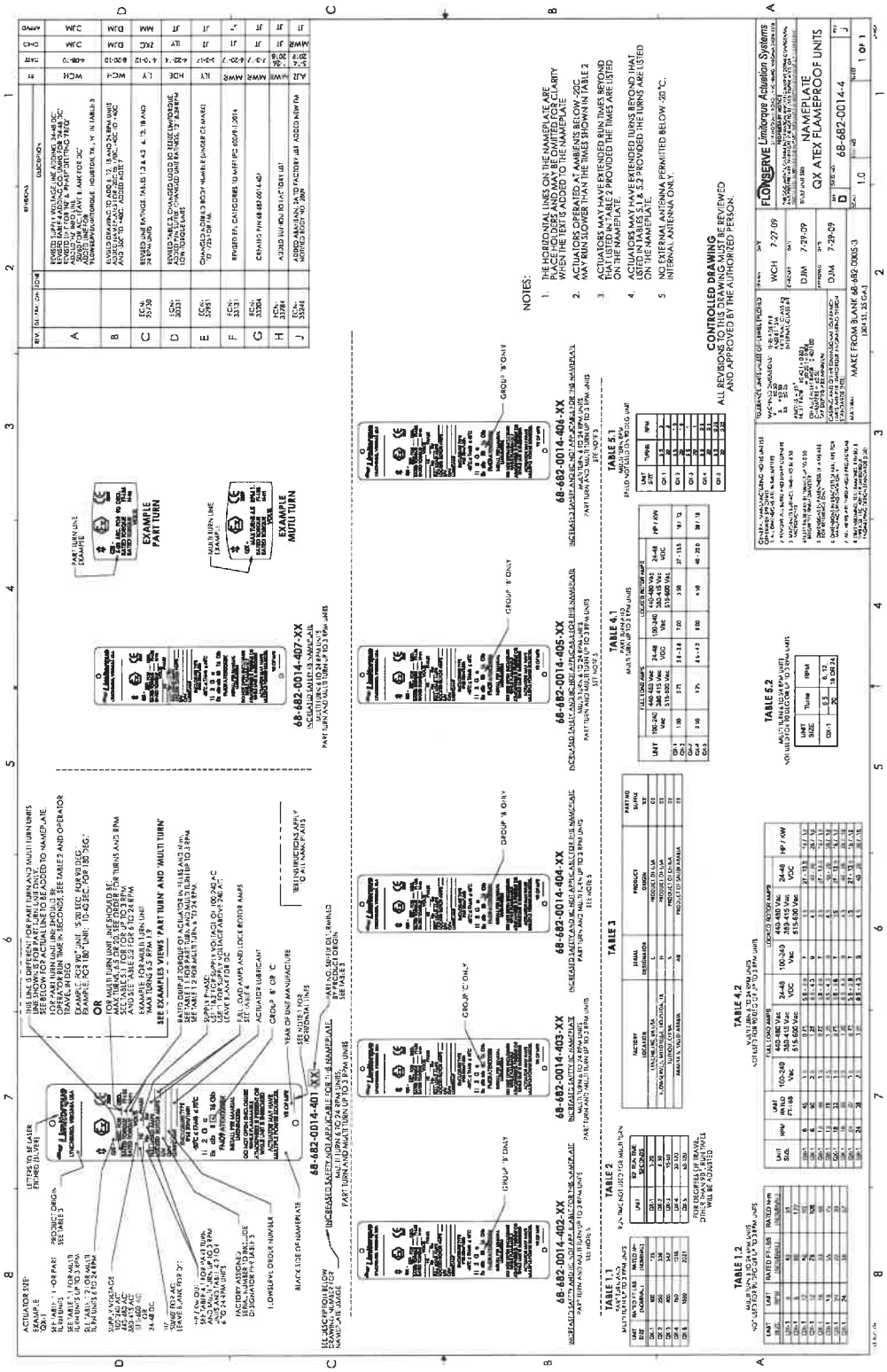

Figure 7.2 -- Typical IECE nameplate

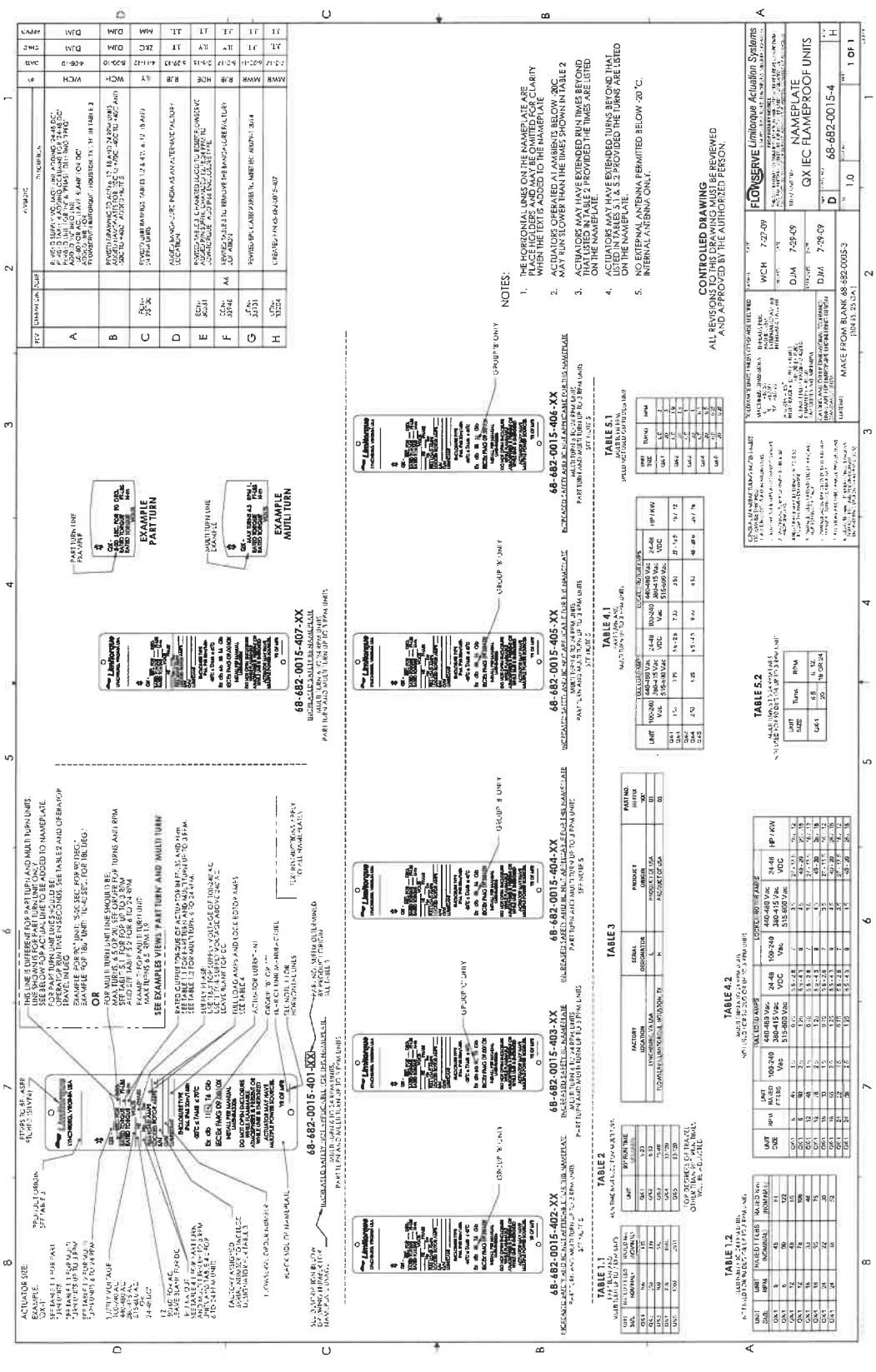

FLOWSERVE



United States
Flowserve Limitorque
5114 Woodall Road
P.O. Box 11318
Lynchburg, VA 24506-1318
Phone: 434-528-4400
Facsimile: 434-845-9736

England
Flowserve Limitorque
Euro House
Abex Road
Newbury
Berkshire, RG14 5EY
United Kingdom
Phone: 44-1-635-46999
Facsimile: 44-1-635-36034

Japan
Limitorque – Nippon Gear Co., Ltd.
NOF Bldg. 9th Floor
1-11-11, Kita-Saiwai, Nishi-Ku
Yokohama (220-0004)
Japan
Phone: 81-45-326-2065
Facsimile: 81-45-320-5962

Singapore
Flowserve Limitorque
12, Tuas Avenue 20
Singapore 638824
Phone: 65-6868-4628
Facsimile: 65-6862-4940

China
Limitorque Beijing, Pte., Ltd.
RM A1/A2
22/F, East Area, Hanwei Plaza
No. 7 Guanghua Road, Chaoyang District
Beijing 100004, Peoples Republic of China
Phone: 86-10-5921-0606
Facsimile: 86-10-6561-2702

India
Flowserve Limitorque, Ltd.
Plot No 4
Export Promotional Industrial Park
Whitefield, Bangalore 560066
India
Phone: 91-80-40146200
Facsimile: 91-80-28410286

FCD LMENIM3306-10-AQ 05/19 Printed in USA.

To find your local Flowserve Limitorque representative:

Visit www.flowserve.com/limitorque or call 1-434-528-4400

Flowserve Corporation has established industry leadership in the design and manufacture of its products. When properly selected, this Flowserve product is designed to perform its intended function safely during its useful life. However, the purchaser or user of Flowserve products should be aware that Flowserve products might be used in numerous applications under a wide variety of industrial service conditions. Although Flowserve can (and often does) provide general guidelines, it cannot provide specific data and warnings for all possible applications. The purchaser/user must therefore assume the ultimate responsibility for the proper sizing and selection, installation, operation, and maintenance of Flowserve products. The purchaser/user should read and understand the Installation Operation Maintenance (IOM) instructions included with the product, and train its employees and contractors in the safe use of Flowserve products in connection with the specific application.

While the information and specifications contained in this literature are believed to be accurate, they are supplied for informative purposes only and should not be considered certified or as a guarantee of satisfactory results by reliance thereon. Nothing contained herein is to be construed as a warranty or guarantee, express or implied, regarding any matter with respect to this product. Because Flowserve is continually improving and upgrading its product design, the specifications, dimensions and information contained herein are subject to change without notice. Should any question arise concerning these provisions, the purchaser/user should contact Flowserve Corporation at any one of its worldwide operations or offices.

© 2014 Flowserve Corporation, Irving, Texas, USA. Flowserve is a registered trademark of Flowserve Corporation.

HD Fowler Company Inc
(208) 846-8366

SECTION

12" PLUG VALVE

O & M MANUAL

PACKAGE

12" PLUG VALVE O & M MANUAL

May 2016

Millcentric Plug Valve Operation and Maintenance Manual Series 600

MILLIKEN®

Milliken
401 S. Highland Avenue
Aurora, Il 60506
Phone: (877) 655-6858
Fax: (630) 844-4160
Website: www.millikenvalve.com

Operations & Maintenance

Functional Description

PLUG VALVE

Plug valves are designed with eccentric rubber disc seating surfaces. The plug rotates 1/4 turn to provide shutoff in pipes. The eccentric seating action provides for tighter shutoff as the actuator is adjusted to provide for more rotation. The valve can be adjusted to a maximum of 10 degrees over travel. The valves can be used to regulate flow rate by positioning the plug between 15 and 90 degrees open.

Manually operated plug valves are powered with levers/2" nuts (valves with torque collars), or gear actuators, which convert multiple handwheel, chainwheel, or nut input turns into 1/4 turn valve operation. The travel of the valve plug is limited by physical stops in the torque collar for wrench operated valves, and in the actuator housing for gear operated valves.

CAUTION: Forcing the handwheel, chainwheel, or nut against the stops will not provide tighter shutoff of the valve and may damage the actuator. Only actuator adjustments will affect valve shutoff.

Motor operated valves are powered with gear actuators, which convert multiple motor input turns into 1/4 turn valve operation. The travel of the valve plug is limited by limit switches in the motor housing and physical stop in the actuator housing. Valve shutoff is affected by limit switch and physical stop settings.

CAUTION: Improperly set limit switches and/or physical stops may damage the motor and/or actuator.

Operations & Maintenance

Installation

When installing the valves, the seat end should be noted. The seat end of the valve is cast in raised letters on the appropriate flange of the valve. Generally, straightway valves should be installed with the highest pressure applied from the opposite end from the seat. This will tend to push the plug into the seat. On pump discharge installations the seat end should be towards the pump.

In the case where shut-off is required in both directions, the valve should be installed so that the highest differential pressure at shut-off is opposite the seat end.

When the service is of a clogging type, with suspended solids likely to build up in the valve body, it is recommended that the valve be installed with the media entering the seat end first. In extreme cases, the valve should be installed with the plug horizontal and rotating upward into the top portion of the valve body cavity to open.

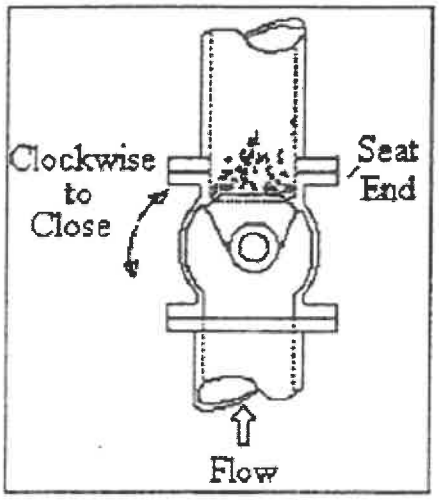

Vertical Pipeline

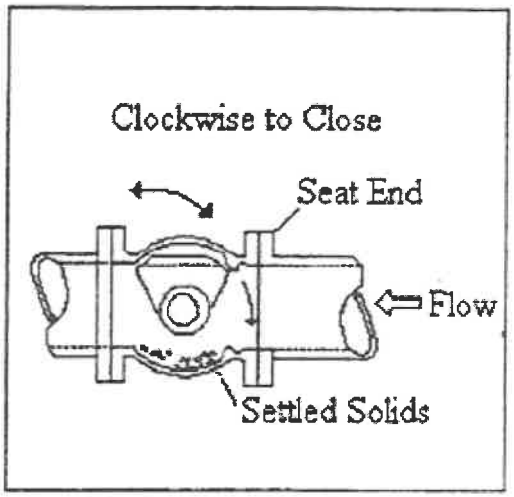

Horizontal Pipeline

Class 125 flanged end valves have ANSI B16.1 flat faced 125/150 flanges. Class 250 flanged end valves have ANSI B16.1 raised face 250 flanges. Standard ANSI B16.21 flanges and gaskets should be used to install the valves in the pipeline. Certain size valves utilize tapped holes on the top and bottom of the flange where a backing nut is not possible. Please check specific drawings for detailed information on sizes and quantities of hexagon head screws required on these valves.

Prior to installing valve, especially ones that are buried, they should be cycled open and closed several times to ensure they are in good working order and have not been damaged during shipment or storage.

Operations & Maintenance

Operating Instructions

Gear Operated Millcentric

Gear operated Millcentric valves close by turning the gear input shaft clockwise until closed. Please see specific valve drawing for the exact number of turns to close.

Position Indicator

(Above ground units only)

The top of the gear operator has an indicator plate to show the plug position. This scale, cast onto the gear housing, is divided into 15 degree lines and indicates the exact valve opening from full open to full closed. Buried service units are totally enclosed and sealed for use below grade.

Open and Closed Memory Stops

The closed memory stop is provided to allow for adjustment to compensate for wear of either the plug coating or the seat. The closed stop is pre-set at the factory and should not require readjustment unless wear occurs.

To adjust the plug for excess plug or seat wear simply rotate the closed stop two turns counterclockwise then rotate the hand wheel or nut (clockwise) to move the plug further into the seat and check the flow. Should this movement fail to shut off the flow then repeat the above step. Afterward re-set the lock nut to prevent the position from being altered.

Gear Operated Valve

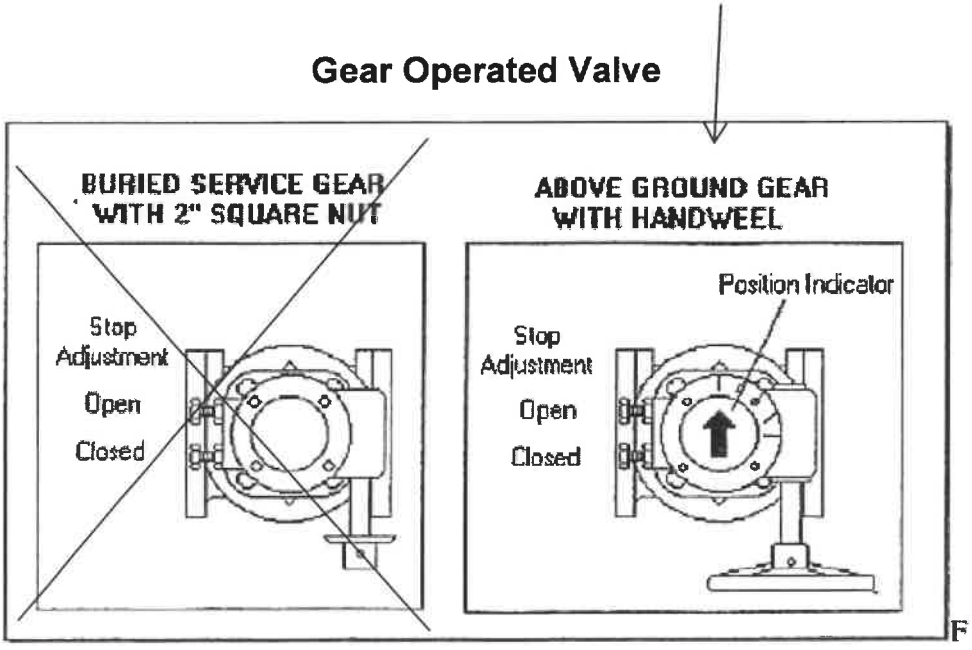

F

Operations & Maintenance

Maintenance Instructions

Gear Operated Valve

The Millcentric is designed and manufactured to be a long life valve under normal circumstances. It does not require any routine maintenance. Cycling the valve from full open to full closed on an annual basis will increase the life of the valve and operator components.

However, if maintenance is required, due to unusual wear or service conditions the following procedure should be followed:

Disassembly Procedure

Body

The Millcentric is a top entry valve therefore the body can remain in line during this operation. Remove the bolts holding the gear operator cap in place. Remove the cap and remove the internal bolts fastening the gear operator cap in place. Remove the gear operator and set aside. With the valve de-pressurized, remove the hexagonal head cap screws that hold the bonnet to the valve body. Remove the bonnet, leaving the plug in the body. At this point, the plug, PTFE thrust washers, journal bearings and bonnet "O" ring are accessible and can be removed and replaced.

Care should be taken not to damage the plug elastomer or bonnet "O" rings upon reassembly.

Reverse the above process for reassembling the Millcentric.

Stem Seals

Remove the bolts holding the gear operator cap in place. Remove the cap and remove the internal bolts fastening the gear operator to the valve body. Remove the gear operator and set aside.

With the valve de-pressurized, using internal snap ring pliers, remove the snap ring and thrust washer. The "U" cup seals can now be pried out of the seal cavity. To replace reverse the above process. After reassembly, cycle valve from open to close approximately five times in order to ensure "U" cups have been properly seated.

Operations & Maintenance

Maintenance Instructions

Gear Operated Valves
To Replace "U" Cup Seals

The Millcentric is designed and manufactured to be a long life valve under normal operating conditions. It does not require any routine maintenance. Cycling the valve from fully open to fully closed on an annual basis will increase the life of the valve and gear components.

However, if maintenance is required, due to unusual wear or service conditions, the following procedure should be followed:

- Remove the internal bolts holding the gear to the valve body.
- Remove gear operator and set aside.
- Remove the external snap ring and support collar.
- Remove the internal snap ring using snap ring pliers.
- Remove the thrust washer and the "U" cup seals are now visible.
- Using a screwdriver pry out the old seals.
- Apply a small amount of silicone or grease to the new "U" cup seals. This will help them slide in the packing cavity.
- Put a piece of shim stock into the cavity and put the "U" cup over it.
- Slide the "U" cup over the stem with shim stock against the stem. This will let any trapped air out of the packing cavity.
- Using two screwdrivers, coax the outer lip of the "U" cup into the cavity while pressing down on the top of the "U" cup with the other screwdriver. Continue to do this all the way around until the "U" cup is at the bottom of the packing cavity.
- Repeat this procedure with the second "U" cup.
- Replace the thrust washer and snap ring.
- Remount the gear operator on the valve-ensure key is inserted in correct keyway.

Operations & Maintenance

Maintenance Instructions

Gear Operated or Actuated Valves
To Replace "U" Cup Seals

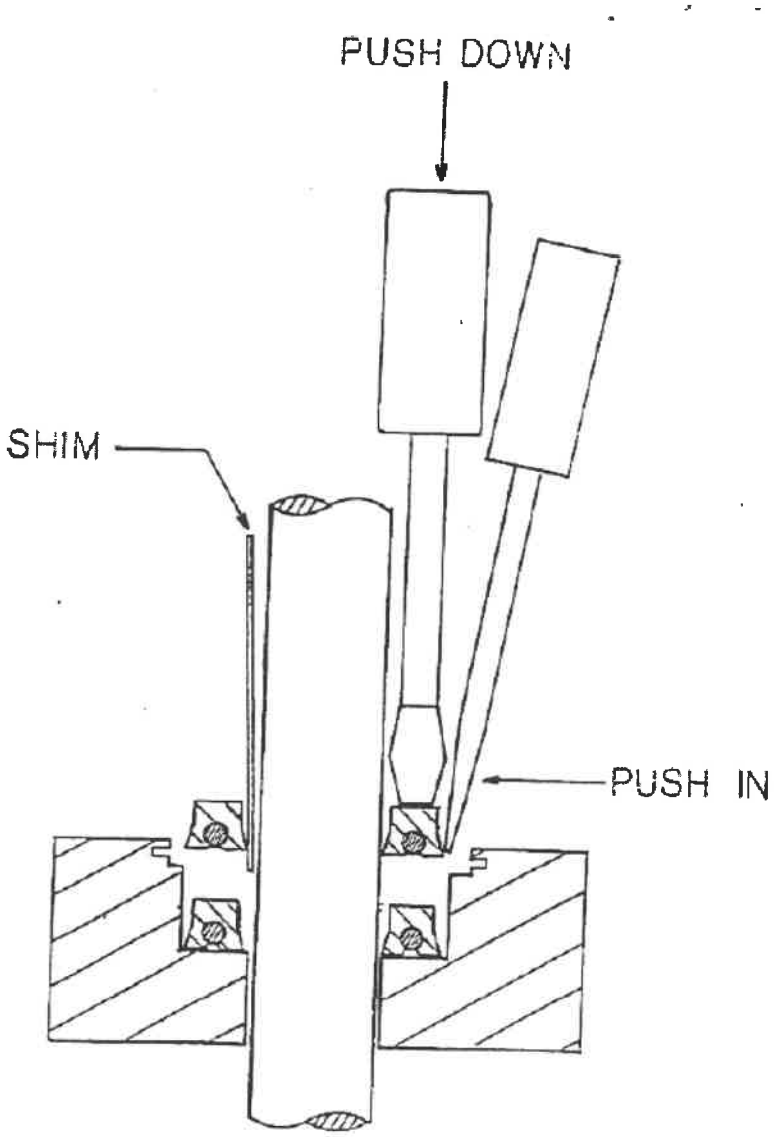

Operations & Maintenance

Trouble Shooting

Gear Operated Valves

SYMPTOM	POSSIBLE CAUSE	ACTION
Valve will not open	-Bent input shaft -Obstruction in line -Excessive Line Pressure -Elastomer Damage	-Replace Worm shaft -Remove obstruction -Reduce Pressure -Replace Plug
Valve will not close	-Bent input shaft -Obstruction in line -Excessive Line Pressure -Elastomer Damage	-Replace Worm shaft -Remove obstruction -Reduce Pressure -Replace Plug
Valve will not shutoff flow	-Improper stop adjustment -Obstruction in line -Excessive Line Pressure -Elastomer Damage	-Adjust closed stop -Remove obstruction -Reduce Pressure -Replace Plug
Valve leaks at plug stem	-"U" cup seals not properly seated -Damaged "U" cup seal	-Cycle valve from open to close -Replace "U" Cups

Operations & Maintenance

Lubrication Schedule

The Millcentric plug valve is a low maintenance non-lubricated eccentric plug valve. As such there is no required lubrication for the valve itself.

The manual worm gear operators where applicable are also sealed grease lubricated units and should not require any type of periodic lubrication. Should the unit need to have the lubricant replaced, it is recommended that **Shell "Gadus S2 V100"** be used, formally named "Alvania RL".

Operations & Maintenance

Storage Procedure

Milliken valves are shipped with the plugs in the open position. Care should be taken to maintain this position while the valves are in storage prior to installation in the pipeline.

Flanged valve end protectors (if supplied) should be kept on the valves until they are ready for installation. Special care should be given to mechanical joint valves to prevent damage to the internal pipe seating area.

Valves should be stored where internal contamination due to sand and mud can be kept to a minimum. Care should be taken to avoid direct sunlight on the plug elastomer during storage.

Electric, hydraulic and pneumatic valve actuators should be care for in accordance with the storage instructions of the actuator manufacturer.

Operations & Maintenance

Spare Parts List

The Milliken eccentric plug valve is a long life valve and does not require stocking spare parts.

MUELLER

QUALITY TEST REPORT

To: KGS Northwest, LLC

PO Number: 11171
Project Name: _____
Pratt Reference: 2787051ML
Description: 12" Plug Valve

This is to certify that the Plug Valves supplied on the above referenced project were tested in accordance with Section 5.2 of AWWA C517-Latest Revision and successfully passed the test.

	Performance Test	3 cycles open, closed		
5.2.1.2	Leakage Test	12" & smaller	175 psi	15 seconds
		14"-24"	150 psi	30 seconds
		30" & larger	150 psi	60 seconds
5.2.1.1	Hydrostatic Test	12" & smaller	265 psi	30 seconds
		14"-24"	225 psi	60 seconds
		30" & larger	225 psi	180 seconds

Date: 10/21/2020

Document Prepared By: Shawn Forss Title: Customer Service Rep III

Date: 10/21/2020

Bob Newkirk
Pratt Quality Assurance Manager

For more information about Pratt or to view our full line of water products, please visit www.prattvalve.com or call Pratt customer service at 1.800.423.1323.

Mueller refers to one or more of Mueller Water Products, Inc., a Delaware corporation ("MWP"), and its subsidiaries. MWP and each of subsidiaries are legally separate and independent entities when providing products and services. MWP does not provide products or services to third parties. MWP and each of its subsidiaries are liable only for their own acts and omissions and not those of each other. MWP brands include Mueller®, Echologics®, Hydro Gate®, Hydro-Guard®, Jones®, Mi.Net®, Milliken®, Pratt®, Singer®, and U.S. Pipe Valve & Hydrant. Please see www.muellerwp.com/about to learn more.

Copyright © 2018 Henry Pratt Company, LLC. All Rights Reserved. The trademarks, logos and service marks displayed in this document are the property of Mueller Water Products, Inc., its affiliates or other third parties. Products marked with a section symbol (§) are subject to patents or patent applications. For details, visit www.mwppat.com. These products are intended for use in potable water applications. Please contact your Mueller Sales or Customer Service Representative concerning any other application(s).

12" PLUG VALVE MATERIAL
ST

Standard Materials of Construction, Fig. 601/600, 12" & Smaller

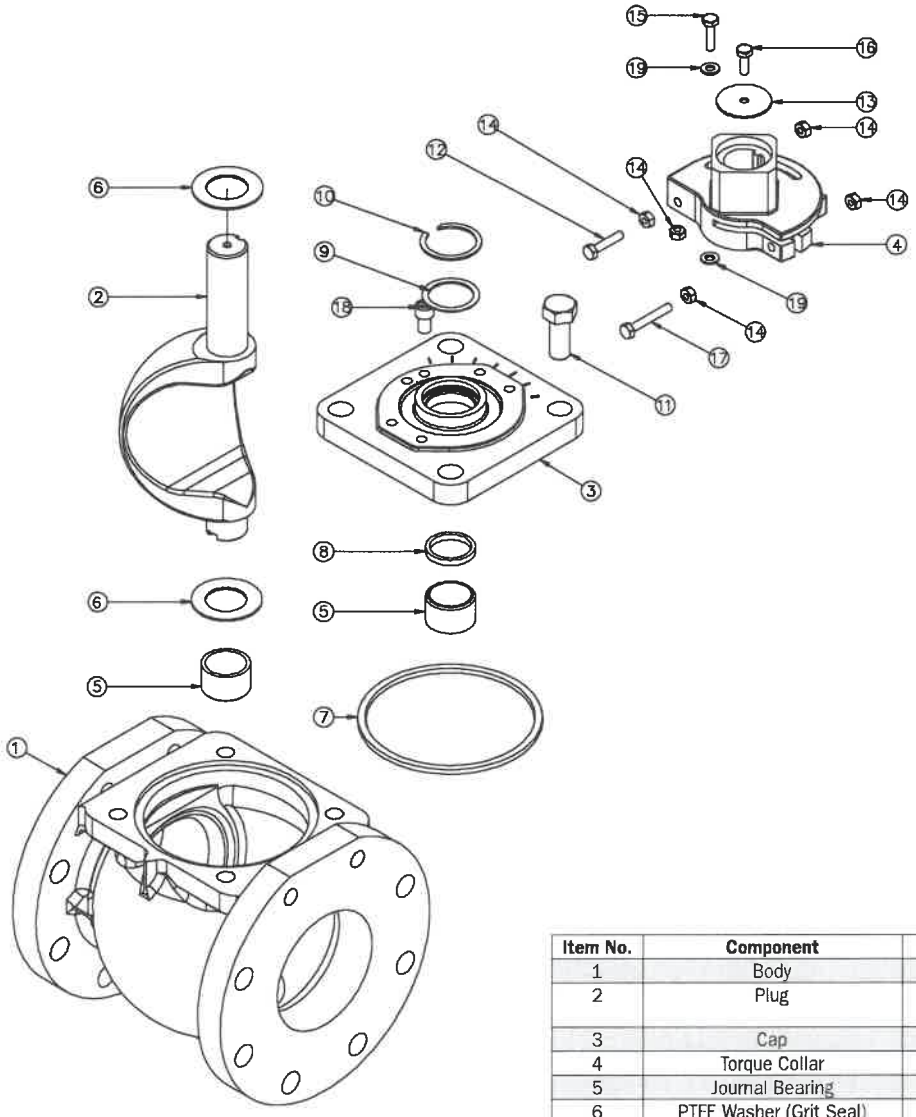

Item No.	Component	Material
1	Body	Cast Iron A126 Class B
2	Plug	Rubber Coated Ductile Iron ASTM A536
3	Cap	Cast Iron A126 Class B
4	Torque Collar	Ductile Iron ASTM A536
5	Journal Bearing	St.Steel — ANSI 316
6	PTFE Washer (Grit Seal)	PTFE
7	O Ring	Elas. as Spec.
8	U Cup Seal	Elas. as Spec.
9	Washer	Brass — ASTM B-138-675
10	Internal Snap Ring	Spring Steel
11	Setscrew	Steel (Zinc Plated)
12*	Closed Stop	Steel (Zinc Plated)
13*	Locking Washer	Steel
14*	Nut	Steel (Zinc Plated)
15*	Open Stop	Steel (Zinc Plated)
16*	Setscrew	Steel (Zinc Plated)
17*	Torque Bolt	Steel (Zinc Plated)
18*	Travel Stop	Steel
19*	Washer	Steel

*NOTE: Torque Collar Assembly on 8" and Smaller

SHOP DRAWING FROM FACTORY INDICATING HAND WHEEL POSITION

VALVE SIZE	GEAR SIZE & RATIO	A	B	C	D	E	F	G	H	J	K	L	M	N	P	Q	S	T
2.5	M2 (20:1)	7.5	3.41	3.50	2.5	5.50	7.00	0.75	4	---	–	0.69	2.5	6	4.75	4.75	1.75	2.00
3	M2 (20:1)	8	3.41	3.75	3	6.00	7.50	0.75	4	---	–	0.75	2.5	6	4.75	4.75	1.75	2.00
4	M3 (30:1)	9	4.38	4.50	4	7.50	9	0.75	6	0.63	2	0.94	3	6	9.50	8	2.00	2.56
5	M3 (30:1)	10	5.63	5.75	5	8.50	10	0.88	8	0.75	2	0.94	3	6	9.50	8	2.00	2.56
6	M3 (30:1)	10.50	5.63	5.75	6	9.50	11	0.88	8	0.75	2	1	3	6	9.50	8	2.00	2.56
8	M5 (50:1)	11.50	7.56	7.63	8	11.75	13.50	0.88	8	0.75	2	1.13	6	12	11.25	8	2.25	3.16
10	M8 (80:1)	13	9.25	8.88	10	14.25	16	1	8	0.88	4	1.19	6	12	11.63	10	2.00	4.63
12	M8 (80:1)	14	10.88	10	12	17.00	19	1	8	0.88	4	1.25	6	12	11.63	10	2.00	4.63

△5 △6 REFERENCE ONLY △6

ABOVE GROUND GEAR W/ HANDWHEEL OPTION

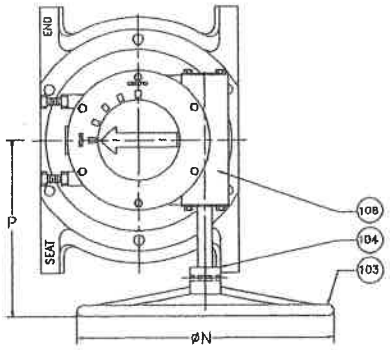

BURIED GEAR W/ 2" NUT OPTION

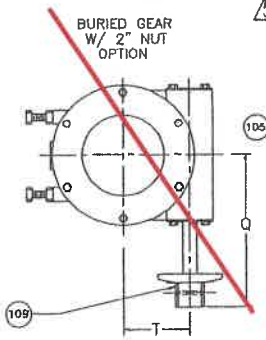



CHAINWHEEL OPTION

SIZE	GEAR	# OF TURNS
2.5"	20:1	5
3"	20:1	5
4"	30:1	7 1/2
5"	30:1	7 1/2
6"	30:1	7 1/2
8"	50:1	12 1/2
10"	80:1	20
12"	80:1	20

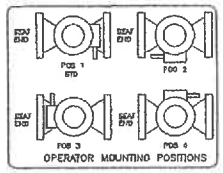

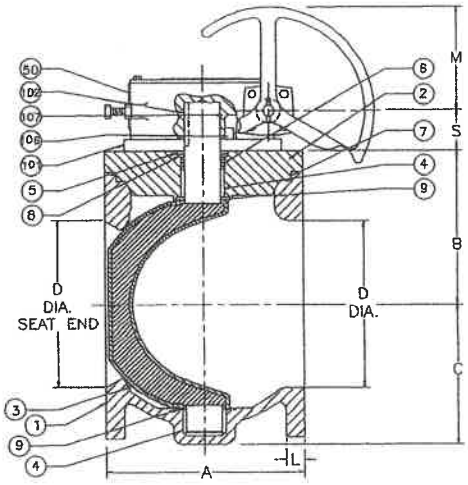

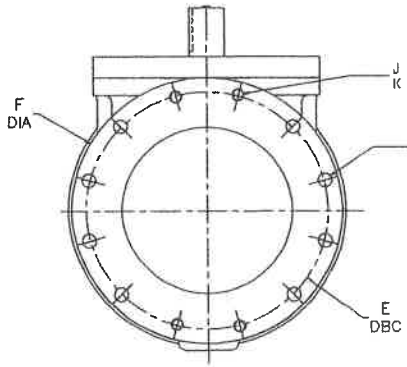

△4

ITEM	QTY	DESCRIPTION	MATERIAL
109	1	2" NUT	DUCTILE IRON
108	1	WORM GEAR	AISA 4140 STEEL
107	1	QUAD GEAR	DUCTILE IRON
106	2	SLEEVE BEARING	BRONZE
105	1	CHAINWHEEL	DUCTILE IRON
104	1	SPRING PIN	1095 STEEL
103	1	HANDWHEEL	DUCTILE IRON
102	1	KEY	1018 STEEL
101	1	RISER RING	A536 DI
50	1	HOUSING	DUCTILE IRON
9	2	WASHER	PTFE
8	1	WASHER	BRASS
7	1	O-RING	ELAS AS SPEC.
6	2	U-CUP SEAL	ELAS AS SPEC.
5	1	RETAINING RING	SPRING STEEL
4	2	SLEEVE BEARING	316 STN. STEEL
3	1	PLUG ELASTOMER AS SPEC.	DUCTILE IRON
2	1	CAP	CAST IRON
1	1	BODY	CAST IRON

THIS DRAWING IS THE PROPERTY OF MILLIKEN VALVE COMPANY AND MUST NOT BE USED IN ANY WAY PREJUDICIAL TO THEIR INTERESTS

ISSUE NUM.	DATE	REVISIONS	BY
1	12/97	REVISED GEAR DIA. FOR 2.5" & 3" VALVE TO NOW AGREE WITH "T"	CR
2	11/98	ADD "T" DIM. REVISE	CR
3	06/01	ADDED WITH, TYPE	JC
4	02/10	ITEM 50 MATERIAL CHANGED FROM CI01 TO DUCTILE IRON (ZONE 2D3)	JC
5	09/10	REMOVED DATA FOR 14" (ZONE 4 2B4)	TF
6	08/12	CORRECTED "T" & "B" DIM. (ZONE 3D4)	AA

BY CR DATE 10/95 SCALE NONE CHK'D DIM. INCHES

TITLE: FIG.601 2-1/2" TO 12" MILLCENTRIC PLUG VALVE, FLANGED, GEAR OPERATED, w/HANDWHEEL, 2" NUT, OR CHAINWHEEL OPTION

DWG. NO. S49110

KGS NORTHWEST, LLC

MANUFACTURER'S REPRESENTATIVE

12509 BEL RED ROAD
SUITE 202
BELLEVUE, WA 98005
(425) 451-0667 : FAX (425) 451-0668

LIMITED WARRANTY

KGS Northwest, LLC warrants Henry Pratt Valve Company and Flowserve products to be free from defects in material and workmanship for 24 months from December 16th 2020. Warranty shall include site visits, shipping labor, and parts to repair valve and actuator. Provided that such products were both (1) under normal use and service and used for the purposes and under the conditions for which they are intended: and (2) installed and maintained according to the manufacture's instructions and applicable local codes.

Sellers obligations under this warranty are conditioned upon prompt written notice of the alleged defect from the purchaser. If any supplied product is proven to have failed to conform to the above stated warranty, the sellers, at its sole option, shall refund, repair, or replace the defective supplied product. KGS shall be the sole inspection entity controlling the alleged product failure.

This warranty does not cover failure of any sold products from KGS Northwest, LLC on this project, caused by external forces such as, but not limited to, acts of God, or the elements, elements. Civil insurrection, vandalism, vehicular or other impact, or frost heave. In the event of such forces occur, then the Warranty is null and void.

In no event shall KGS Northwest LLC be liable for any consequential indirect incidental special or punitive damages lost profits or revenues or diminution in value arising out of or relating to any breach of these terms.

KGS limits its total liability to the value for the products sold on this project.