CITY OF BELLEVUE, IDAHO

WASTEWATER COLLECTION AND TREATMENT FACILITIES

1991

STATE LOAN NO. 1-1892-02

STATE GRANT NO. 1892-02





FA NO. 189067

FORSGREN ASSOCIATES / P.A.

UTILITY OWNERS	PHONE NUMBERS
CITY OF BELLEVUE	788-2128
INTERMOUNTAIN GAS	788-3489
IDAHO POWER CO.	788-2262
SUN VALLEY CABLEVISION INC.	726-4561
U.S. WEST (DIG LINE)	1-444-2424
IDAHO TRANSPORTATION DEPT. DIVISION OF HIGHWAYS	788-3365

WARNING
THIS DRAWING REDUCED
APPROX. ONE-HALF



LOCATION MAP

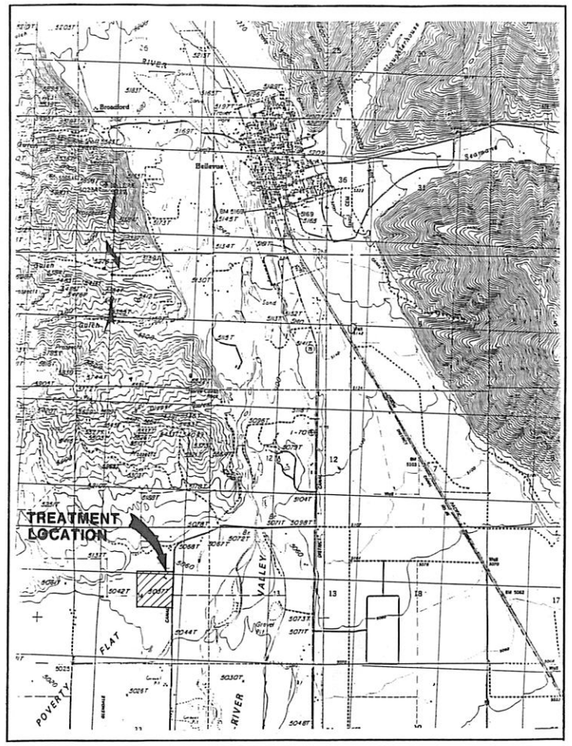

VICINITY MAP

DESIGN CRITERIA

PARAMETER	DESIGN VALUE
DESIGN POPULATION	3000
AVERAGE DAILY DESIGN FLOW	300,000 GAL./DAY
PEAK FLOW	520 GPM
BOD LOADING	510 LBS./DAY
SUSPENDED SOLID LOADING	510 LBS./DAY
TOTAL NITROGEN	105 LBS./DAY
PUMP STATION #1 FLOW	550 GPM
WET WELL VOLUME	2155 GAL.
PUMPS (2)	5 HP
PRESSURE LINE	
FLOW	550 GPM
VELOCITY	3.5 FPS
CHLORINATION CHAMBER	
FLOW	1000 GPM
CONTACT TIME	15 MIN.
AERATION BLOWERS	10 HP
AIR REQUIRED	1020 LBS. O_2/DAY

LAGOON	CELL 1	CELL 2	CELL 3
– AREA (ACRES)	1.76	1.7	1.0
– VOLUME (MG)	5.7	5.5	3.2
SUMMER DETENTION TIME (DAY)	10.5	10.5	3.15
WINTER DETENTION TIME (DAY)	10	10	3

INDEX

1	TITLE SHEET
2	VICINITY & LOCATION MAPS, DESIGN CRITERIA, & INDEX
3	GENERAL NOTES CONTINUED
4	SYMBOLS & ABBREVIATIONS
5	HYDRAULIC PROFILE
6	SYSTEM LAYOUT
7	PROJECT SHEET LAYOUT
8 THRU 12	2ND ST. PLAN & PROFILES
13 THRU 16	3RD ST. PLAN & PROFILES
17 THRU 20	4TH ST. PLAN & PROFILES
21 THRU 24	5TH ST. PLAN & PROFILES
25 THRU 28	6TH ST. PLAN & PROFILES
29	ALLEY 'C' PLAN & PROFILE
30	7TH ST. PLAN & PROFILE
31	ALLEY 'D' PLAN & PROFILE
32 THRU 33	CHESTNUT ST. PLAN & PROFILES
34	WALNUT ST. PLAN & PROFILE
35	PINE ST. PLAN & PROFILE
36	ELM ST. PLAN & PROFILE
37	CEDER ST. PLAN & PROFILE
38	CEDER ST. & COTTONWOOD ST. PLAN & PROFILE
39	BIRCH ST. & BEECH ST. PLAN & PROFILE
40	ALLEY 'B' & COTTONWOOD ST. PLAN & PROFILE
41	7TH ST. PLAN & PROFILE
42	8TH ST. PLAN & PROFILE
43 THRU 45	MAIN ST. (EAST SIDE) PLAN & PROFILE
46 THRU 47	MAIN ST. (WEST SIDE) PLAN & PROFILE
48	50 WEST ST. PLAN & PROFILE
49 THRU 50	HIGHWAY 93 (EAST SIDE) PLAN & PROFILE
51	HIGHWAY 93 (WEST SIDE) PLAN & PROFILE
52	GANNET ROAD PLAN & PROFILE
53	HARDWOOD ST. PLAN & PROFILE
54	GANNET ROAD PLAN & PROFILE
55	GLEN ASPEN & PARKVIEW DR. PLAN & PROFILE
56	GLEN ASPEN DR. PLAN & PROFILE
57	RIVERVIEW DR. PLAN & PROFILE
58	
59	BROADFORD RD. PLAN & PROFILES
60	FORBIS & MARTIN LN. PLAN & PROFILE
61	BROADFORD RD. PLAN & PROFILES
62	MAIN AND SPRUCE STREET
63 THRU 77	PRESSURE LINE PLANS AND PROFILES
78 THRU 80	LIFT STATION NO. 1 BUILDING
81	LIFT STATION NO. 1 ELECTRICAL NOTES
82	LIFT STATION 2
83	LIFT STATION 3
84	LIFT STATION MISCELLANEOUS DETAILS
85 THRU 87	MISCELLANEOUS DETAILS
T-1	TREATMENT PLANT LAYOUT AND LAND APPLICATION
T-2	TREATMENT PLANT DETAILS
T-3	EXTERIOR & INTERIOR DIKE SECTIONS
T-4	CHLORINATION–AERATION BUILDING FLOOR PLAN
T-5 THRU T-6	CHLORINATION–AERATION BUILDING ELEVATIONS
T-7	CHLORINATION–AERATION BUILDING ELECTRICAL
T-11	TRANSFER STRUCTURES A & B
T-12	WATER DIVERSION STRUCTURE DETAILS
T-13	MISCELLANEOUS STRUCTURE DETAILS
T-14	IRRIG. PUMPS, OUTLET STRUCTURES, & TRANS. STRUCTURE C
T-15	AERATION SYSTEM LAYOUT
T-16	AERATION DETAILS
T-17	CENTER PIVOT CONNECTION DETAILS
T-18	INFLUENT "METERING FLUME STRUCTURE
T-19 THRU T-20	MISCELLANEOUS DETAILS
T-21	LAGOON LANDSCAPING PLAN

WARNING
THIS DRAWING REDUCED
APPROX. ONE-HALF

PROFESSIONAL ENGINEER REGISTERED 6394 STATE OF IDAHO WILLIAM BRYAN TEUSCHER 3/91

GENERAL NOTES:

GENERAL

1. THESE ARE GENERAL NOTES THAT APPLY TO THE PROJECT EXCEPT WHERE MORE SPECIFIC INFORMATION IS INDICATED ON DRAWINGS OR IN SPECIFICATIONS.
2. CONSTRUCTION SHALL CONFORM WITH LATEST EDITION OF THE UNIFORM BUILDING CODE EXCEPT WHERE THE FOLLOWING NOTES OR OTHER APPLICABLE CODES ARE MORE RESTRICTIVE.
3. THE CONTRACTOR SHALL NOT DRAIN OIL OR LITTER THE PROJECT SITE.

CIVIL

1. ALL DISTANCES AND DATA SHALL BE CHECKED BY THE CONTRACTOR PRIOR TO THE START OF CONSTRUCTION. IN CASE OF CONFLICT THE ENGINEER SHALL BE NOTIFIED IMMEDIATELY SO THAT CLARIFICATION MAY BE MADE PRIOR TO THE START OF THE WORK.
2. DIMENSIONS TO/OR COORDINATES FOR MANHOLES, PIPELINES, ETC., ARE TO CENTERLINE UNLESS OTHERWISE NOTED.
3. ELEVATIONS SHOWN ARE TO FINISHED SURFACE OR PIPE INVERT UNLESS OTHERWISE NOTED.
4. THE CONTRACTOR SHALL RETAIN AND PROTECT OR REMOVE AND REPLACE ALL LANDSCAPING, TREES, UTILITIES, DITCHES, CULVERTS, FENCES, MAILBOXES, SIGNS, LIGHTPOLES, HEADGATES, EXISTING ASPHALT PAVING, AND ALL OTHER MISCELLANEOUS ITEMS. ANY DAMAGE DONE BY THE CONTRACTOR SHALL BE REPAIRED AT HIS EXPENSE.
5. GENERAL LOCATION OF UTILITIES ARE SHOWN ON THE PLANS. THEY ARE TO BE USED FOR GENERAL INFORMATION ONLY AND DO NOT DESIGNATE EXACT UTILITY LOCATION. UTILITIES SHOWN ARE NOT INCLUSIVE OF ALL UTILITIES THAT EXIST. IT IS THE RESPONSIBILITY OF THE CONTRACTOR TO NOTIFY THE APPROPRIATE UTILITY COMPANIES WHEN CONSTRUCTION MIGHT INTERFERE WITH NORMAL OPERATION OF ANY UTILITIES. IT SHALL ALSO BE THE CONTRACTOR'S RESPONSIBILITY TO HAVE THE APPROPRIATE UTILITY COMPANY FIELD-LOCATE ANY UTILITY INSTALLATIONS WHICH MIGHT BE AFFECTED BY CONSTRUCTION PRIOR TO BEGINNING WORK IN THAT AREA. THE CONTRACTOR SHALL BE RESPONSIBLE FOR MAINTAINING SERVICE OF EXISTING UTILITIES AND FOR RESTORING ANY UTILITIES DAMAGED DUE TO CONSTRUCTION AT NO ADDITIONAL COST TO THE OWNER.
6. ALL SEWERLINES ARE TO BE LOCATED AS SHOWN ON THE PLANS UNLESS RELOCATED IN THE FIELD BY THE ENGINEER TO AVOID UNFORESEEN UTILITY INTERFERENCE.
7. THERE SHALLL BE A 10 FEET MINIMUM HORIZONTAL SEPARATION DISTANCE BETWEEN AL EXISTING WATERLINES AND NEW SEWER LINES EXCEPT WHERE WATER AND SEWER LINES CROSS AT APPROXIMATELY RIGHT ANGLES, WHERE A MINIMUM OF 1.5 FEET OF VERTICAL SEPARATION SHALL BE MAINTAINED.
8. MINIMUM CLEARANCE BETWEEN NEW PIPELINES AND EXISTING UTILITIES AND STRUCTURES (EXCEPT SEWERS) SHALL BE TWO FOOT HORIZONTALLY.
9. THRUST BLOCKS SHALL BE PLACED AT ALL DIRECTION CHANGES IN THE PRESSURE PIPE.
10. WHERE WORK IS PERFORMED ON EASEMENTS, THE CONTRACTOR SHALL TAKE EVERY PRECAUTION TO ELIMINATE ANY ADVERSE EFFECTS ON THE ADJACENT PROPERTY.
11. IT WILL BE THE RESPONSIBILITY OF THE CONTRACTOR TO MAKE ARRANGEMENTS FOR WATER REQUIRED FOR COMPACTION, ANY DUST PREVENTION MEASURES, AND FOR TESTING OF LINES AND LAGOONS.
12. THE CONTRACTOR SHALL PROVIDE TRAFFIC CONTROL SIGNING WHERE REQUIRED IN ACCORDANCE WITH THE FEDERAL MANUAL OF UNIFORM TRAFFIC CONTROL DEVICES.
13. MINIMUM DEPTH OF COVER FOR SEWERLINES UNLESS OTHERWISE SHOWN ON THE PLANS SHALL BE FIVE (5) FEET.
14. THE CONTRACTOR SHALL BE RESPONSIBLE FOR SECURING SOURCES FOR GRANULAR MATERIAL, WATER FOR CONSTRUCTION, WASTE SITE(S), AND ADDITIONAL MATERIALS THAT MAY BE NECESSARY FOR PROPERLY CONSTRUCTING THE PROJECT.
15. CONSTRUCTION SHALL CONFORM WITH THE LATEST EDITION OF THE UNIFORM BUILDING CODE, EXCEPT WHERE OTHER APPLICABLE CODES OR THESE DRAWINGS AND/OR SPECIFICATIONS ARE MORE RESTRICTIVE.
16. THE AREA WHERE THE LAGOONS ARE TO BE CONSTRUCTED SHALL BE STRIPPED OF ALL TOPSOIL PRIOR TO BEGINNING THE EARTHWORK OPERATION. THE STRIPPED TOPSOIL SHALL BE STOCKPILED ADJACENT TO THE LAGOON DIKES AND RESPREAD ON THE OUTER DIKE SURFACES AS SHOWN ON SHEET T-2.
17. SPECIAL CARE SHALL BE TAKEN ALONG THE STATE HIGHWAY TO PROTECT THE PAVED PORTION FROM ANY DAMAGE DURING CONSTRUCTION. SECTIONS DAMAGED BY THE CONTRACTOR WHICH ARE OUTSIDE THE PAY LIMITS FOR STREET REPAIR SHALL BE REPAIRED BY THE CONTRACTOR TO THE SATISFACTION OF THE STATE HIGHWAY DEPARTMENT AT NO ADDITIONAL EXPENSE TO THE OWNER.
18. ANY WORK DONE WITHIN HIGHWAY DEPARTMENT RIGHT-OF-WAY SHALL BE DONE IN ACCORDANCE WITH THE RIGHT-OF-WAY SPECIAL USE PERMIT. SIGNING, FLAGMEN, AND SPECIAL PRECAUTIONS SHALL BE DONE IN ACCORDANCE WITH HIGHWAY DEPARTMENT AND OSHA CRITERIA.
19. THE EXACT LOCATION OF AIR RELIEF VALVES ON THE PRESSURE LINE ARE TO BE DETERMINED IN THE FIELD BY THE ENGINEER.
20. THE CONTRACTOR SHALL BE RESPONSIBLE FOR CONFORMING WITH OSHA REQUIREMENTS DURING CONSTRUCTION FOR TRENCH EXCAVATION AND OTHER SAFETY STANDARDS REQUIRED DURING CONSTRUCTION.

BEL-NOTE

NO.	REVISIONS	BY	DATE

DRAWN 12/90 GH DATE — CHECKED 3/91 DATE

DESIGNED 3/91 DATE — PROJECT ENGINEER

APPROVED 4/91 DATE — PROJECT MANAGER

CITY OF BELLEVUE
IDAHO

FORSGREN ASSOCIATES / P.A.

WASTEWATER COLLECTION AND TREATMENT FACILITIES

GENERAL NOTES, DESIGN CRITERIA & INDEX

PROJECT NO. 189067

SHEET NO. 2

GENERAL NOTES (CONT.)

FOUNDATIONS AND BACKFILL

1. COMPACT STRUCTURAL FILL BENEATH FLOOR SLABS AND FOUNDATIONS TO A MINIMUM DRY DENSITY OF 96% OF MAXIMUM DRY DENSITY AS DETERMINED BY (ASTM, D-698).
2. PLACE 6" INCHES OF GRAVEL FILL BELOW ALL STRUCTURES. GRAVEL BORROW SHALL MEET THE REQUIREMENTS OF SECTION 02222-2.02 SELECT FILL MATERIALS.
3. AVOID USE OF HEAVY COMPACTION EQUIPMENT CLOSER THAN 5 FEET TO WALLS.
4. PROVIDE DOWELS OUT OF FOOTINGS FOR ALL WALL AND COLUMN REINFORCING. DOWELS TO BE SAME SIZE AND SPACING AS WALL AND COLUMN REINFORCING.

STRUCTURAL

1. DESIGN IS IN ACCORDANCE WITH THE LATEST EDITION OF THE UNIFORM BUILDING CODE EXCEPT WHERE OTHER APPLICABLE CODES OR SPECIFICATIONS ARE MORE RESTRICTIVE.
2. DESIGN LIVE LOADS SHALL BE IN ACCORDANCE WITH APPLICABLE CODES AND SPECIAL PROJECT REQUIREMENTS AS DETERMINED BY THE ENGINEER.
   A. SNOW LOADS 40 LBS. PER SQUARE FOOT.
   B. THIS PROJECT IS IN SEISMIC ZONE 3.
   C. BUILDING FLOOR SLABS ARE DESIGNED FOR 100 LBS. PER SQUARE FOOT.
   D. WALKWAY SLABS OF HYDRAULIC STRUCTURES AR DESIGNED FOR 50 LBS. PER SQUARE FOOT.
3. CONSTRUCTION JOINTS SHALL BE LOCATED WHERE SHOWN ON DRAWINGS OR AS APPROVED BY THE ENGINEER. PROVIDE WATERSTOPS IN CONSTRUCTION JOINTS IN WATERTIGHT STRUCTURES AS DETAILED ON DRAWINGS. IN ALL WATER RETAINING STRUCTURES, SLAB JOINTS SHALL HAVE WATERSTOPS AND 3/4" SEALANT GROOVE CONTINUOUS ALL ALONG JOINT.

STRUCTURAL STEEL

1. STEEL CONSTRUCTION SHALL CONFORM TO SPECIFICATION AND STANDARDS OF THE LATEST EDITION OF THE AISC STEEL CONSTRUCTION MANUAL.
2. ALL STRUCURAL TUBING SHALL BE OF STEEL CONFORMING TO ASTM-500 GRADE 'B'. ALL STRUCTURAL PIPE STEEL SHALL CONFORM TO ASTM-53 TYPE 'S'. ALL OTHER STRUCTURAL SHAPES, BARS, PLATES, ETC. EXCEPT CONRETE REINFORCING BARS SHALL MEET ASTM A-36 SPECIFICATIONS.
3. ALL WELDING SHALL BE BY THE SHIELDED ARC METHOD AND SHALL CONFORM TO AWS CODE FOR ARC AND GAS WELDING CONSTRUCTION. WELDERS SHALL QUALIFY WITH THE SPECIFICATIONS FOR STANDARD QUALIFICATION PROCEDURE OF THE AWS.
4. STEEL TO BE CONCRETE ENCASED SHALL NOT BE PAINTED, AND SHALL BE FREE OF ANY SUBSTANCE THAT MIGHT IMPAIR BOND BETWEEN CONCRETE AND STEEL AT THE TIME CONCRETE IS PLACED.
5. STRUCTURAL STEEL SHALL BE PAINTED IN ACCORDANCE WITH SPECIFICATIONS.

CONCRETE

1. ALL STRUCTURAL CONCRETE SHALL DEVELOP THE COMPRESSIVE STRENGTH AS REQUIRED BY SECTION 03000 OF THE SPECIFICATIONS.
2. REINFORCING STEEL SHALL BE DEFORMED BILLET-STEEL BARS MEETING THE REQUIREMENTS OF SPECIFICATIONS FOR DEFORMED BILLET-STEEL BARS FOR CONCRETE REINFORCEMENT, ASTM A615, GRADE 60 EXCEPT STIRRUPS AND TIES-GRADE 40.
3. FABRICATION AND PLACING OF REINFORCING BARS SHALL CONFORM TO THE MANUAL OF STANDARD PRACTICE FOR DETAILING REINFORCED CONCRETE STRUCTURES ACI-315, LATEST EDITION.
4. SHOP DRAWINGS SHALL BE REQUIRED FOR ALL REINFORCING STEEL, AND SHALL BE SUBMITTED TO THE ENGINEER FOR REVIEW BEFORE FABRICATION.
5. REINFORCE ALL CONCRETE WITH A MINIMUM OF 1/4 OF 1% OF CROSS SECTION EACH WAY UNLESS NOTED OTHERWISE.
6. ALL LAP SPLICES SHALL BE 36 BAR DIAMETERS (MINIMUM 24") UNLESS NOTED OTHERWISE.
7. PROVIDE CORNER BARS FOR ALL HORIZONTAL REINFORCING: BARS TO BE THE SAME SIZE AND SPACING AS HORIZONTAL REINFORCING UNLESS OTHERWISE SHOWN.
8. UNLESS INDICATED OTHERWISE ON THE DRAWINGS, MINIMUM CONCRETE COVER OVER REINFORCING BARS SHALL BE:

FOR CONCRETE CAST AGAINST EARTH	3"
FOR SURFACES IN CONTACT WITH EARTH	
WALLS, BEAMS, COLUMNS	2"
SLABS, WITH NO. 5 BARS & SMALLER	1 1/2"
SLABS, WITH NO. 6 BARS & LARGER	2"
FOR SURFACES IN CONTACT WITH WATER	2"
FOR SURFACES EXPOSED TO WEATHER	
WITH NO. 5 BARS & SMALLER	1 1/2"
WITH NO. 6 BARS & LARGER	2"
FOR UNDERSIDE OF SLABS OVER WATER IN ENCLOSED CONDUITS, BEAMS & COLUMNS	

CONCRETE

NOT IN CONTACT WITH EARTH OR WATER OR EXPOSED TO WEATHER	1 1/2"
FOR ALL INTERIOR SURFACES NOT IN CONTACT WITH WATER OR EARTH	1"

9. TOLERANCE IN PLACING REINFORCING SHALL BE 1/4" FOR MEMBERS 24" OR LESS IN DEPTH AND 1/2" FOR MEMBERS MORE THAN 24" IN DEPTH.
10. WATERSTOPS, PIPES, WALL PIPES AND OTHER INSTALLED ACCESSORIES OR MATERIALS SHALL BE HELD SECURELY IN PLACE WHILE CONCRETE IS BEING PLACED.
11. UNLESS INDICATED OTHERWISE, ASIDE FORM NORMAL SUPPORTING ACCESSORIES, ADD THE FOLLOWING:

    IN SLABS-NO. 5 RISER BARS AT 36" O.D. MAX. TO SUPPORT TOP REINFORCING.
    IN WALLS WITH 2 CURTAINS-NO. 3 U OR Z SPACERS AT 6'-0" O.C. E.W.

12. CLIPS OR SUPPORTS SHALL NOT BE PLACED IN CONTACT WITH FORMS OR SUBGRADE. CONCRETE BLOCKS OR DOBBIES USED TO SUPPORT BARS SHALL BE PLACED IN SUFFICIENT NUMBERS TO PREVENT SETTLEMENT BUT THEY SHOULD NOT BE CONTINUOUS.
13. DOWELS SHALL BE THE SAME SIZE & SPACING AS BARS WITH WHICH THEY ARE LAPPED, AND THE LAP AND EMBEDMENT SHALL BE 32 DIAMETERS MIN. FOR EACH. DOWELS SHALL BE SECURED IN PLACE AND NOT SHOVED IN FRESHLY PLACED CONCRETE.
14. IN RESTRICTED AREAS WHERE REBARS CANNOT EXTEND AS FAR AS REQUIRED DUE TO ADJACENT STRUCTURES, EXTEND AS FAR AS POSSIBLE AND END IN STANDARD HOOKS.
15. BARS ENDING IN HOOKS OR RIGHT ANGLES SHALL CONFORM TO ACI BUILDING CODE, LATEST EDITION.
16. CHAMFER (3/4") ALL EXPOSED CONCRETE EDGES & CORNERS.
17. PROVIDE 2" MIN. CLEARANCE BETWEEN BARS WITH ACCESSORIES AND PIPES, FLANGES OR METAL PARTS EMBEDDED IN CONCRETE.

MASONRY

1. PLACE VERTICAL REINFORCING STEEL CENTERED IN WALLS.
2. PLACE HORIZONTAL BOND BEAMS WITH 2 - #4 BARS AT 4'-0" O.C.
3. JOINT REINFORCING SHALL BE A #9 WIRE TRUSS AT 24" O.C.
4. ALL CORNERS SHALL HAVE VERTICAL REINFORCING BARS CONSISTING OF 1 - #5 BAR, CONTINUOUS. HORIZONTAL REINFORCEMENT IN BOND BEAMS SHALL BE CONTINUOUS AROUND CORNERS.
5. VERTICAL WALL REINFORCEMENT SHALL BE 1 - #5 BAR AT 24" O.C. VERTICAL WALL REINFORCEMENT SHALL BE CONTINUOUS AND SHALL BE DOWELLED INTO SUPPORTING SLAB OR FOOTING WITH MATCHING DOWELS.
6. BOND BEAMS SHALL BE REQUIRED AT THE TOP AND BOTTOM COURSED OF ALL WALLS.
7. CONCRETE MASONRY UNITS SHALL CONFORM TO ASTM C-90, GRADE N, TYPE 1.
8. GROUT SHALL HAVE A MINIMUM ULTIMATE COMPRESSIVE STRENGTH OF 2000 PSI AT 28 DAYS. (f '= 2000 PSI)
9. MASONRY ASSEMBLAGE SHALL HAVE (f ' = 1350 PSI.)
10. ALL CELLS SHALL BE IN VERTICAL ALIGNMENT TO PROVIDE A MINIMUM UNOBSTRUCTED CORE OF 3" X 3". DOWELS FROM FOOTINGS/WALLS/SLABS, SHALL BE SET TO ALIGN WITH GROUTED CELLS.
11. ALL CELLS OR BOND BEAMS CONTAINING REINFORCING STEEL, ANCHORS, OR INSERTS SHALL BE FILLED SOLID WITH GROUT.
12. CONCRETE SURFACES SHALLL BE CLEANDED OF AL LAITANCE PRIOR TO PLACING CONCRETE MASONRY UNITS.
13. LAP SPLICES IN REINFORCING STEEL SHALL BE MADE BY LAPPING BARS A MINIMUM OF 30 BARS DIAMETERS.
14. PROVIDE 2-#4 VERTICAL FULL HEIGHT EACH SIDE OF ALL OPENINGS IN CMU WALLS.
15. PROVIDE 8" X 16" LINTEL WITH 2-#5 OVER ALL OPENINGS UNLESS OTHERWISE SHOWN. LINTELS TO BEAR MINIMUM OF 8" EACH SIDE OF OPENING. GROUT ALL CELLS WITH REINFORCING AND BOLTS.

ENVIRONMENTAL RESTRAINTS

1. POLLUTION: COMPLY WITH ALL FEDERAL, STATE, AND LOCAL LAWS AND REGULATIONS CONTROLLING POLLUTION OF THE ENVIRONMENT. PROTECT AGAINST THE CONTAMINATION OF SOIL, WATER, OR AIR BY OIL, FUEL, FLUID SPILLS, CHEMICALS, GARBAGE, DEBRIS, OR OTHER WASTES AT ALL TIMES.
2. EQUIPMENT: EQUIPMENT IS TO BE SERVICED ONLY IN DESIGNATED AREAS. TAKE MEASURES TO PREVENT SPILLS OF OIL OR OTHER FLUIDS.
3. SANITARY: PROVIDE SANITARY FACILITIES FOR ALL WORKERS AND THE ENGINEER AND SERVICE SO THAT CANTAMINANTS WILL NOT BE DISCHARGED FROM THE FACILITIES.
4. DUST CONTROL: HAVE AVAILABLE AT ALL TIMES ADEQUATE SPRINKLER EQUIPMENT TO ABATE ANY DUST NUISANCE, OR AIR POLLUTION THAT MAY ARISE DUE TO CONSTRUCTION OPERATIONS. NO EXTRA PAYMENT WILL BE MADE FOR SPRINKLING OPERATIONS. FAILURE TO CONTROL DUST MAY RESULT IN TEMPORARY SHUTDOWN OF THE PROJECT AND NO ADDITIONAL TIME WILL BE ALLOWED. PROVIDE ALL WATER NECESSARY FOR SPRINKLING OPERATIONS.
5. VEGETATION PROTECTION: LIMIT WORK TO ONLY THOSE AREAS AS DEFINED ON THE PLANS AND ONLY AS NECESSARY. PROTECT EXISTING VEGETATION AT ALL TIMES TO ELIMINATE DAMAGE TO EXISTING GRASSES, BRUSH, OR OTHER NATIVE PLANTS OR TOPSOIL.
6. HAULING SPILLS: PREVENT SPILLAGE OR SPREADING OF MATERIALS ALONG HAUL ROADS OR ANY NONDESIGNATED AREA. CLEAN UP AND PROPERLY DISPOSE OF ANY SPILLS.

TESTING HYDRAULIC STRUCTURES

1. WHILE FILLING HYDRAULIC STRUCTURES FOR REQUIRED TESTING, VARIOUS BASINS OR CHANNELS WITHIN A SPECIFIC STRUCTURE SHOULD BE FILLED SIMULTANEOUSLY FOR BALANCED LOADING.

MECHANICAL - GENERAL

1. ALL PIPING IS TO BE ADEQUATELY SUPPORTED. SEE SPECIFICATIONS FOR FREQUENCY OF PIPE SUPPORTS OR HANGERS.

ELECTRICAL

1. REFER TO MECHANICAL PLANS FOR EXACT LOCATION OF MECHANICAL EQUIPMENT.
2. ALL ELECTRICAL INSTALLATION TO CONFORM TO THE LATEST N.E.C. AND LOCAL CODES.
3. ALL SURFACE FLOURESCENT FIXTURES MUST CONFORM TO N.E.C. 410-76
4. MOUNTING HEIGHT OF GENERAL PURPOSE OUTLETS AND SWITCHES SHALL BE 16" AND 48" RESPECTIVELY UNLESS OTHERWISE NOTED.
5. COORDINATE MOUNTING HEIGHT AND LOCATION OF ALL OUTLETS, SWITCHES, AUXILIARY EQUIPMENT, AND OTHER DEVICES WITH THE ENGINEERING DRAWINGS. PRIOR TO INSTALLATION REVIEW WITH THE GENERAL CONTRACTOR THE LOCATION OF MILLWORK AS A FINAL CHECK TO PREVENT COVERING OF ELECTRICAL ITEMS.
6. ALL FLOURESCENT LAMPS SHALL BE FROM THE SAME MANUFACTURER.
7. SEE PANEL SCHEDULE FOR CURCUIT WIRE SIZES AND INFORMATION.
8. COORDINATE LOCATION OF LIGHT FIXTURES IN MECHANICAL ROOMS WITH MECHANICAL EQUIPMENT.
9. THE ELECTRICAL CONTRACTOR SHALL BE RESPONSIBLE TO FIELD VERIFY ALL PANEL CLEARANCES PER N.E.C. 110-16 AND 384-2 AND NOTIFY ALL OTHER TRADES ON THE JOB OF THESE CODE REQUIREMENTS. NOTIFY THE ENGINEER IMMEDIATELY OF ANY CONFLICTS.
10. ELECTRICAL CONTRACTOR SHALL FURNISH ALL MOTOR DISCONNECTS, STARTERS, AND CONTROL STATIONS FOR MECHANICAL EQUIPMENT UNLESS THE SAME IS FURNISHED AS AN INTEGRAL PART OF THE EQUIPMENT.
11. ALL PARALLEL CONDUCTORS TO BE INSTALLED IN STRICT ACCORDANCE WITH N.E.C. ARTICLE 310-4. WIRE TO BE LAID ON FLAT SURFACE FOR MEASUREMENT. MACHINE MEASUREMENT IS NOT ACCEPTABLE. USE TORQUE WRENCH ON TERMINATIONS.
12. PROVIDE SAFETY DISCONNECTS AS REQUIRED AT ALL CONNECTIONS TO MECHANICAL EQUIPMENT.
13. DISCONNECT SWITCHES SHOWN IN APPROXIMATE LOCATION ONLY. CONTRACTOR FIELD VERIFY LOCATION OF ALL ELECTRICAL SWITCHES AND MOTOR CONTROL FOR PROPER CODE CLEARANCE.
14. ALL PILOT LIGHTS ARE TO BE PUSH TO TEST.
15. CONTRACTOR MAY BUNDLE MOTOR CIRCUITS INTO LARGER CONDUITS IN ACCORDANCE WITH N.E.C. TABLE 310-16 NOTE 8.
16. EACH MOTOR STARTER TO BE EQUIPPED WITH:
    DPDT AUXILIARY CONTACTS
    ELAPSED TIME METER, GREEN "ON" PILOT LIGHT
    HAND-OFF-AUTO SWITCH, ENGRAVED LAMINATED PLASTIC IDENTIFICATION LABEL
17. ALL CONDUIT IS TO BE RUN IN THE WALLS, CEILINGS, OR FLOORS.

PROFESSIONAL ENGINEER REGISTERED 6394 STATE OF IDAHO WILLIAM BRYAN TEUSCHER 3/91

WARNING
THIS DRAWING REDUCED APPROX. ONE-HALF

NO.	REVISIONS	BY	DATE

DRAWN CM 1/91 DATE — CHECKED 3/91 DATE
DESIGNED 3/91 DATE — PROJECT ENGINEER
APPROVED 3/91 DATE — PROJECT MANAGER

CITY OF BELLEVUE
IDAHO

FORSGREN ASSOCIATES / P.A.

WASTEWATER COLLECTION AND TREATMENT FACILITIES

GENERAL NOTES, DESIGN CRITERIA & INDEX

PROJECT NO. 189067

SHEET NO. 3

BELNOTE2

SYMBOLS

PLAN VIEW	EXISTING	PROPOSED
PRESSURE LINE		
GRAVITY LINE		
PROPERTY OR R/W LINE		
EASEMENT LINE		
MONUMENT LINE		
FENCE	BARBED WIRE	CHAINLINK
CONTOUR LINE	4250	4250
CONTOUR ELEVATION	(4250.0)	(4250.0)
BANK SLOPES		
STORM DRAIN LINE	SD	SD
WATER LINE	W	W
GAS LINE	G	G
TELEPHONE CABLE	T	T
ELECTRIC CABLE	E	E
SANITARY SEWER LINE	SS	SS
ASPHALT PAVING		
FIRE HYDRANT		
WATER VALVE		
WATER METER	WM	WM
MANHOLE	MH	MH
CATCH BASIN	CB	CB
CLEAN OUT BOX	COB	COB
OVERHEAD POWERLINE	OP	
POLE & ANCHOR		
STREET LIGHT		
STRUCTURE		

	EXISTING	PROPOSED
CURB & GUTTER		
SIDEWALK		
RAILROAD TRACKS		
GUARD RAIL		
OPEN DITCH		
CANAL		
CULVERT		
SECTION CORNER		
TEST PIT		
MONUMENT		
BENCH MARK	BM	BM NO. 46 ELEV. 4256.50
SIGN		
POWER POLE	PP	PP
TELEPHONE BOX		
DECIDUOUS TREE		
CONIFEROUS TREE		
SHRUBS		
AIR RELEASE VALVE		
THRUST BLOCK		
CONTROL POINT	CP1 HV5	

PROFILE SECTIONS

	EXISTING	PROPOSED
GROUND PROFILE		
CULVERT	ROUND ARCH BOX	ROUND ARCH BOX
UNDISTURBED SOIL		
UNDISTURBED ROCK		
TEST PIT		
FIRE HYDRANT		
MANHOLE		
WATER LINE		

SECTION AND DETAIL IDENTIFICATION

SECTION CALL-OUT

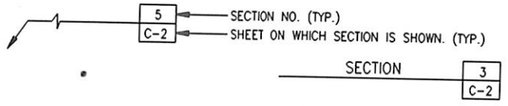

DETAIL CALL-OUT

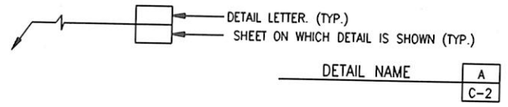

ABBREVIATIONS

ABUT	ABUTMENT
AC	ASBESTOS CEMENT
ADT	AVERAGE DAILY TRAFFIC
APPROX	APPROXIMATELY
AZ	AZIMUTH
BAL	BALANCE
BCR	BEGIN CURB RETURN
BEG	BEGINNING/BEGIN
BDRY	BOUNDARY
BK	BACK
BKFL	BACKFILL
BLD FLG	BLIND FLANGE
BLDG	BUILDING
BLM	BUREAU OF LAND MANAGEMENT
BM	BENCH MARK
BLK	BLOCK
BOT	BOTTOM
BRG	BEARING
BSMT	BASEMENT
BTWN	BETWEEN
CALC	CALCULATED
CB	CATCH BASIN
CCW	COUNTERCLOCKWISE
C-C	CENTER TO CENTER
C&G	CURB AND GUTTER
CEM	CEMETERY
CFS	CUBIC FEET PER SECOND
CL	CENTERLINE
CIP	CAST IRON PIPE
CMP	CORRUGATED METAL PIPE
CMP-A	CORRUGATED METAL PIPE-ARCH
COB	CLEAN OUT BOX
COL	COLUMN
CONC	CONCRETE
CONST	CONSTRUCT
COR	CORNER
CTR	CENTER
CU FT	CUBIC FEET
CU YD	CUBIC YARD
CULV	CULVERT
CW	CLOCKWISE
D	DEGREE
DET	DETAIL
DIA	DIAMETER
DIP	DUCTILE IRON PIPE
DIST	DISTANCE
DN	DOWN
DWG	DRAWING
E	EAST
ECR	END CURB RETURN
ELEV	ELEVATION
ELEC	ELECTRIC
EMB	EMBANKMENT
ENGR	ENGINEER
ENT	ENTRANCE
EO	EDGE OF OIL
EQUIP	EQUIPMENT
EST	ESTIMATE
EXC	EXCAVATION
EXIST	EXISTING

FEN COR	FENCE CORNER
FD	FOUND
FDN	FOUNDATION
FIN	FINISH
FL	FLOW LINE
FLR	FLOOR
FLG	FLANGE
FT	FEET
FTG	FOOTING
G	GAS
GALV	GALVANIZED
GEN	GENERAL
GM	GAS METER
GV	GAS VALVE
HDWL	HEADWALL
H&T	HUB AND TACK
HORIZ	HORIZONTAL
HWL	HIGH WATER LEVEL
HWY	HIGHWAY
HYD	HYDRANT
ID	INSIDE DIAMETER
INFO	INFORMATION
IRR	IRRIGATION
INV	INVERT
JCT	JUNCTION
L	LENGTH
LB	POUND
LIC	LICENSE
LIN	LINEAR/LINEAL
LS	LAND SURVEYOR
LT	LEFT
LWL	LOW WATER LEVEL
MAINT	MAINTENANCE
MATL	MATERIAL
MAX	MAXIMUM
MKR	MARKER
MH	MANHOLE
MI	MILE
MISC	MISCELLANEOUS
MON	MONUMENT
MPH	MILES PER HOUR
N	NORTH
NTS	NOT TO SCALE
OD	OUTSIDE DIAMETER
O-O	OUTSIDE TO OUTSIDE
OFF REV	OFFICE REVISION
ORIG	ORIGINAL
PVMT	PAVEMENT
PC	POINT OF CURVATURE
PCC	POINT OF COMPOUND CURVATURE
PERF	PERFORATED
PI	POINT OF INTERSECTION
PL	PROPERTY LINE
POC	POINT ON CURVE
PP	POWER POLE

PCR	POINT OF REVERSE CURVE
PROJ	PROJECT
PROP	PROPERTY
PT	POINT OF TANGENCY
POB	POINT OF BEGINNING
PVC	POLYVINYL CHLORIDE
QTY	QUANTITY
R	RANGE/RADIUS
RCP	REINFORCED CONCRETE PIPE
RCCP	REINFORCED CONCRETE CYLINDER PIPE
RD	ROAD
REF	REFERENCE
REINF	REINFORCED
REQD	REQUIRED
REV	REVISION
RP	REFERENCE POINT
RR	RAILROAD
RT	RIGHT/ROUTE
R/W	RIGHT OF WAY
S	SOUTH
SAN	SANITARY
SCHED	SCHEDULE
SD	STORM SEWER
SEC COR	SECTION CORNER
SHT	SHEET
SPECS	SPECIFICATIONS
SQ	SQUARE
SQ FT	SQUARE FEET
SQ YD	SQUARE YARD
SS	SANITARY SEWER
ST	STREET
STL	STEEL
STN STL	STAINLESS STEEL
STA	STATION
STD	STANDARD
STRUCT	STRUCTURE
T	TOWNSHIP, TELEPHONE
TAN	TANGENT
TBC	TOP BACK CURB
TEMP	TEMPORARY
TELE	TELEPHONE/TELEGRAM
TP	TELEPHONE POLE
TYP	TYPICAL
UG	UNDERGROUND
VC	VERTICAL CURVE
VERT	VERTICAL
VOL	VOLUME
VPI	VERTICAL POINT OF INTERSECTION
VPC	VERTICAL POINT OF CURVE
VPT	VERTICAL POINT OF TANGENCY
W	WEST/WATER
WM	WATER METER
XING	CROSSING
X-SEC	CROSSING SECTION



WARNING
THIS DRAWING REDUCED
APPROX. ONE-HALF

NO.	REVISIONS	BY	DATE

DRAWN CM 1/91 DATE — CHECKED 2/91 DATE
DESIGNED 3/91 DATE — PROJECT ENGINEER
APPROVED 3/91 DATE — PROJECT MANAGER

CITY OF BELLEVUE, IDAHO

FORSGREN ASSOCIATES / P.A.

WASTEWATER TREATMENT AND COLLECTION FACILITIES

SYMBOLS & ABBREVIATIONS

PROJECT NO. 189067

SHEET NO. 4

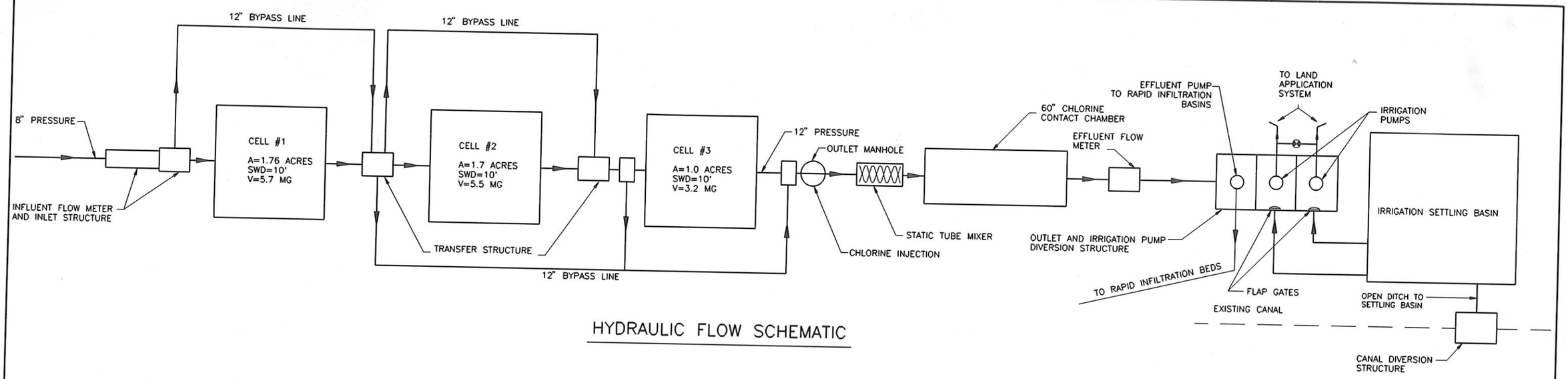

HYDRAULIC FLOW SCHEMATIC

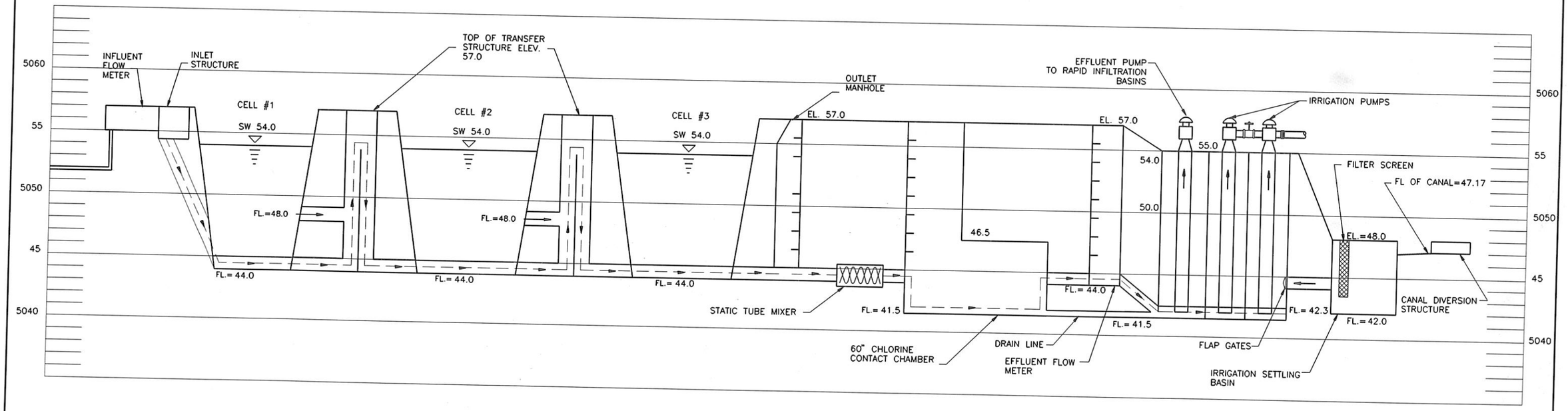

HYDRAULIC PROFILE

WARNING
THIS DRAWING REDUCED
APPROX. ONE-HALF

PROFESSIONAL ENGINEER REGISTERED 6394 STATE OF IDAHO WILLIAM BRYAN TEUSCHER 3/91

BEL-HYD

NO.	REVISIONS	BY	DATE

DRAWN CM 1/91 DATE — CHECKED 3/91 DATE
DESIGNED 3/91 DATE — PROJECT ENGINEER
APPROVED 4/91 DATE — PROJECT MANAGER

CITY OF BELLEVUE, IDAHO

FORSGREN ASSOCIATES / P.A.

WASTEWATER COLLECTION AND TREATMENT FACILITIES

HYDRAULIC PROFILE

PROJECT NO. 89067

SHEET NO. 5



NO.	REVISIONS	BY	DATE

DRAWN CM 11/90 DATE CHECKED DATE

DESIGNED 2/91 DATE PROJECT ENGINEER

APPROVED 2/91 DATE PROJECT MANAGER

CITY OF BELLEVUE,
IDAHO

FORSGREN ASSOCIATES / P.A.

WASTEWATER COLLECTION AND TREATMENT FACILITIES

SYSTEM LAYOUT

PROJECT NO. 89067

SHEET NO. 6

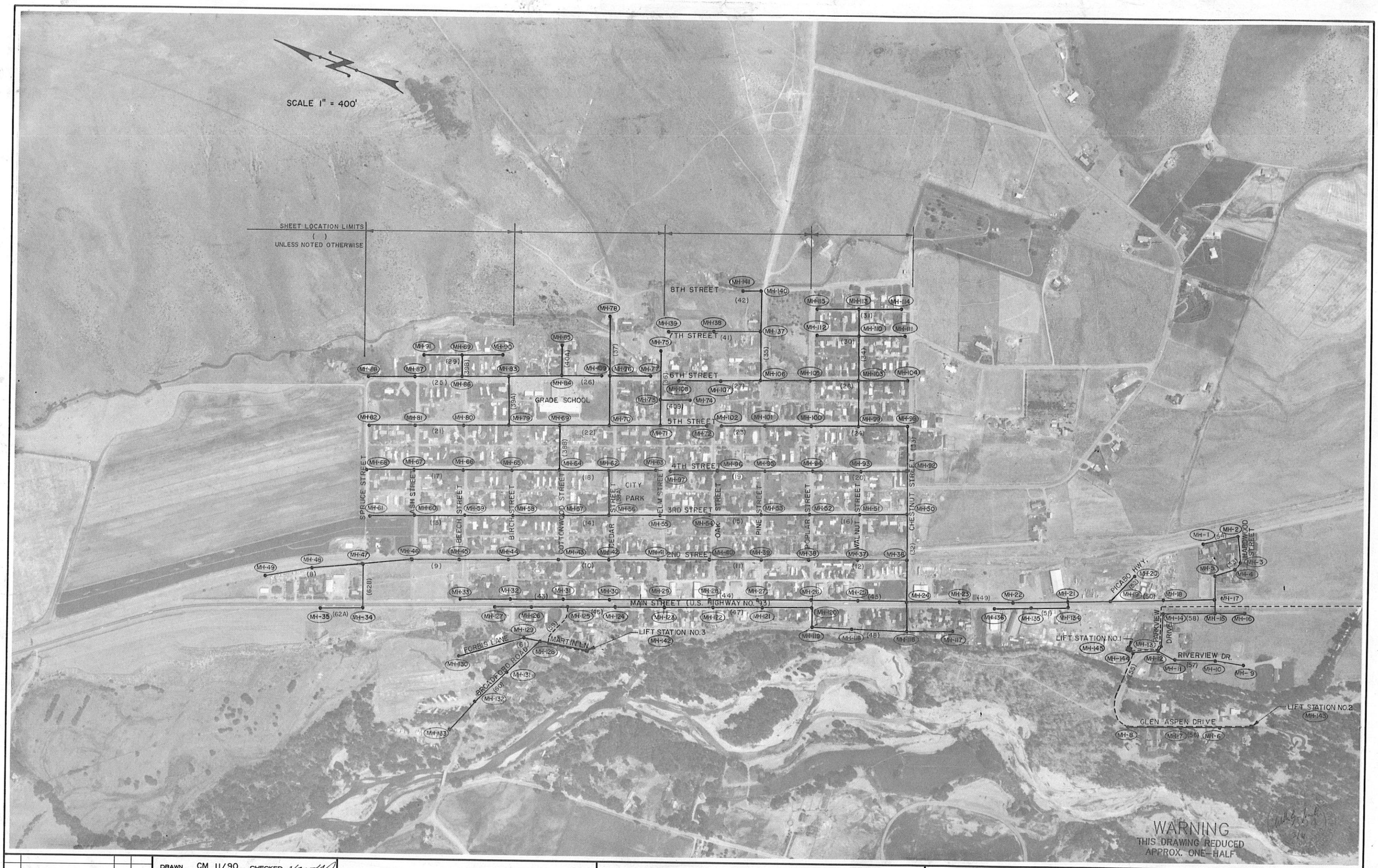

NO.	REVISIONS	BY	DATE

DRAWN CM 11/90 DATE CHECKED DATE

DESIGNED 3/91 DATE PROJECT ENGINEER

APPROVED 3/91 DATE PROJECT MANAGER

CITY OF BELLEVUE,
IDAHO

FORSGREN
ASSOCIATES / P.A.

WASTEWATER COLLECTION AND TREATMENT FACILITIES

PROJECT SHEET LAYOUT

PROJECT NO. 89067

SHEET NO. 7

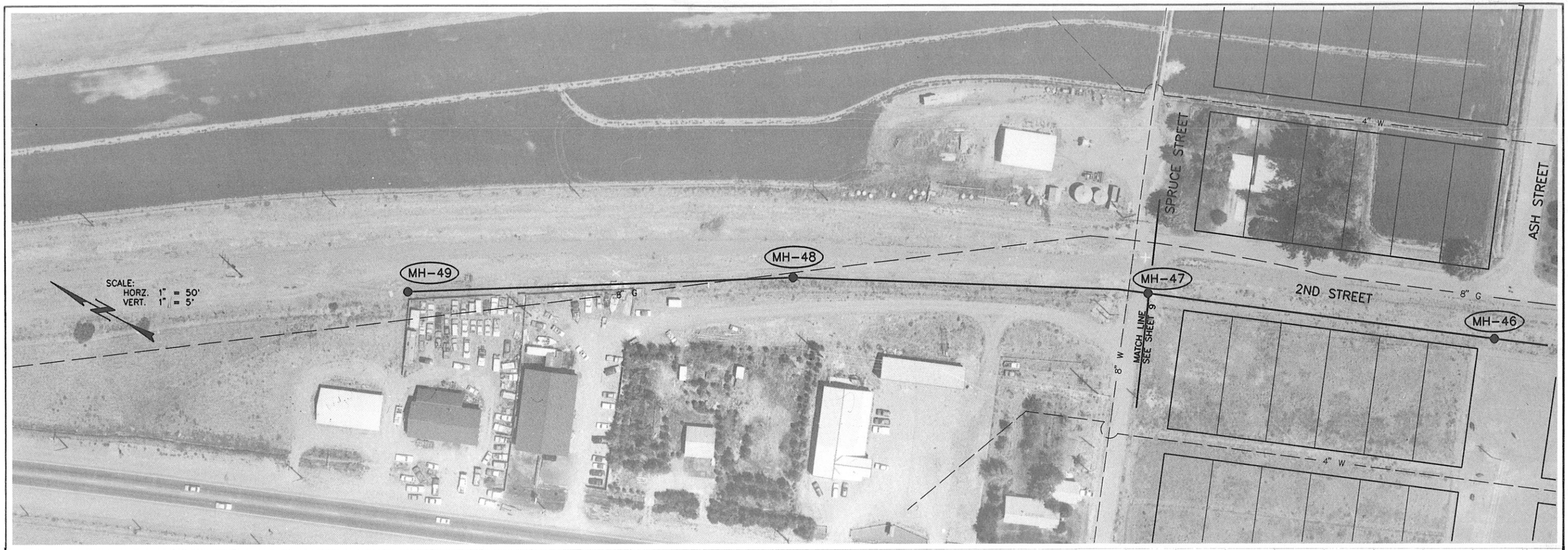

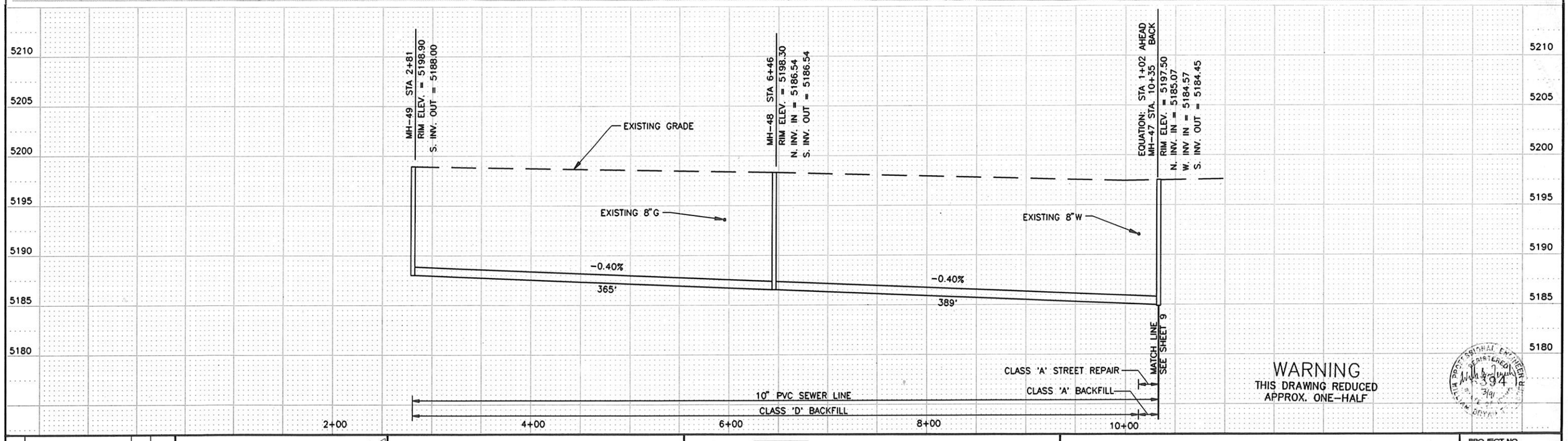

WARNING
THIS DRAWING REDUCED
APPROX. ONE-HALF

NO.	REVISIONS	BY	DATE

DRAWN BWM 8/90 DATE CHECKED 3/91 DATE

DESIGNED 3/91 DATE PROJECT ENGINEER

APPROVED 3/91 DATE PROJECT MANAGER

CITY OF BELLEVUE,
IDAHO

FORSGREN
ASSOCIATES / P.A.

WASTEWATER COLLECTION AND TREATMENT FACILITIES

2ND STREET

PROJECT NO. 89067

SHEET NO. 8

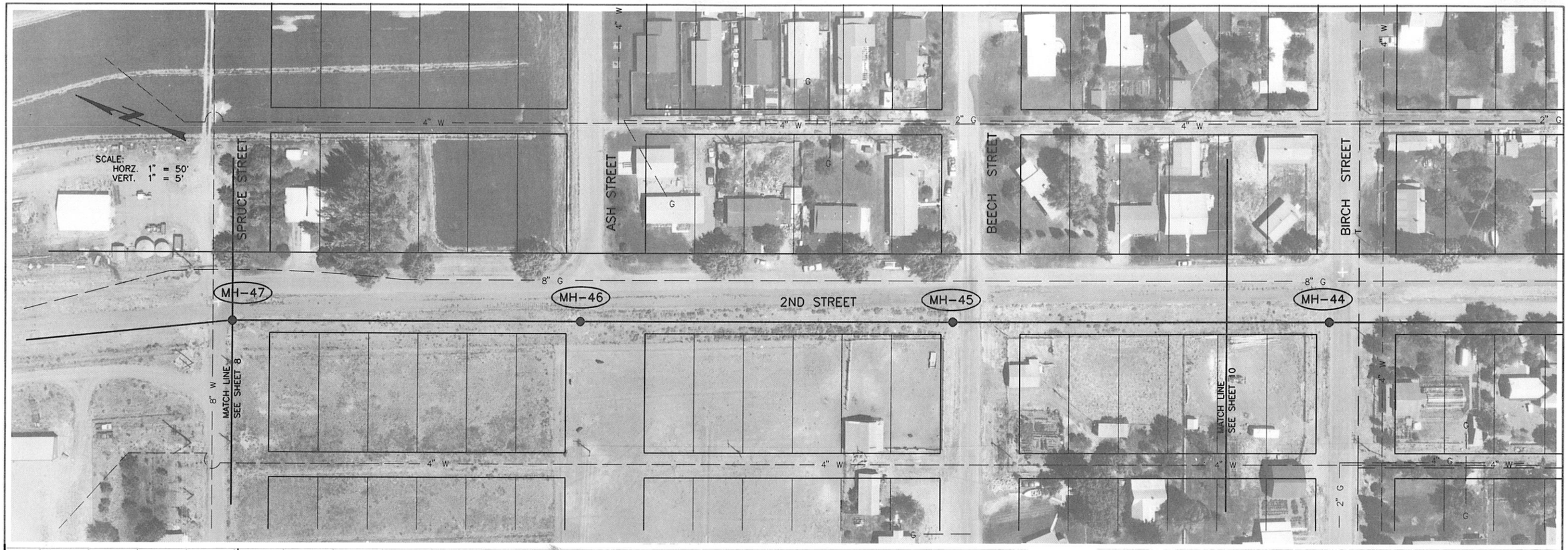

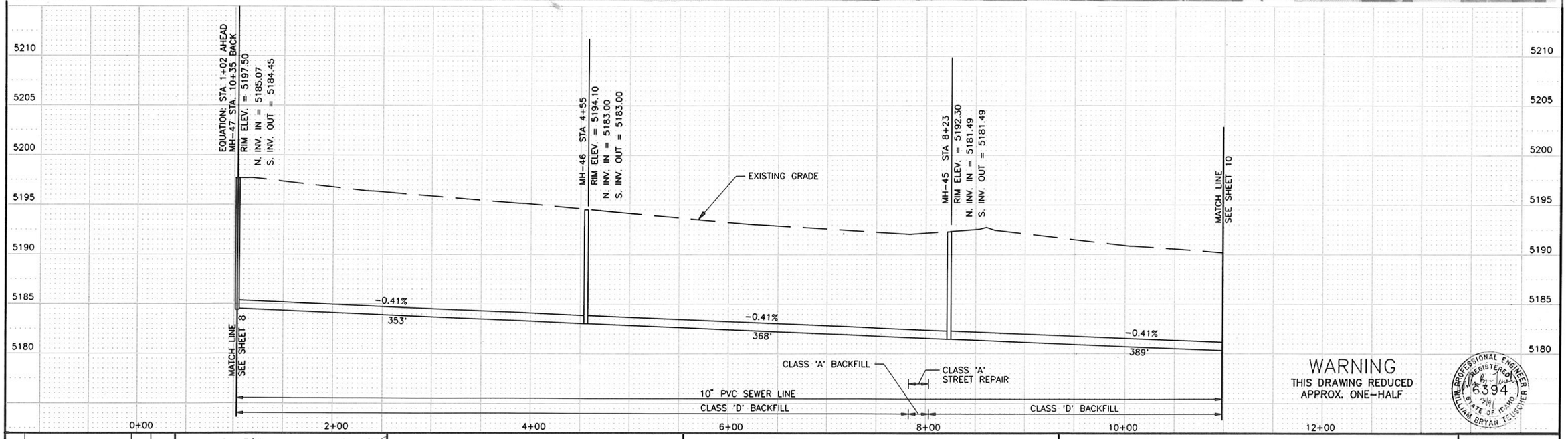

WARNING
THIS DRAWING REDUCED
APPROX. ONE-HALF

REGISTERED PROFESSIONAL ENGINEER
6394
3/91
STATE OF IDAHO
WILLIAM BRYAN THOMPSON

NO.	REVISIONS	BY	DATE

DRAWN BWM 7/90 DATE CHECKED 3/91 DATE
DESIGNED 3/91 DATE PROJECT ENGINEER
APPROVED 3/91 DATE PROJECT MANAGER

CITY OF BELLEVUE,
IDAHO

FORSGREN
ASSOCIATES / P.A.

WASTEWATER COLLECTION AND TREATMENT FACILITIES

2ND STREET

PROJECT NO. 89067

SHEET NO. 9



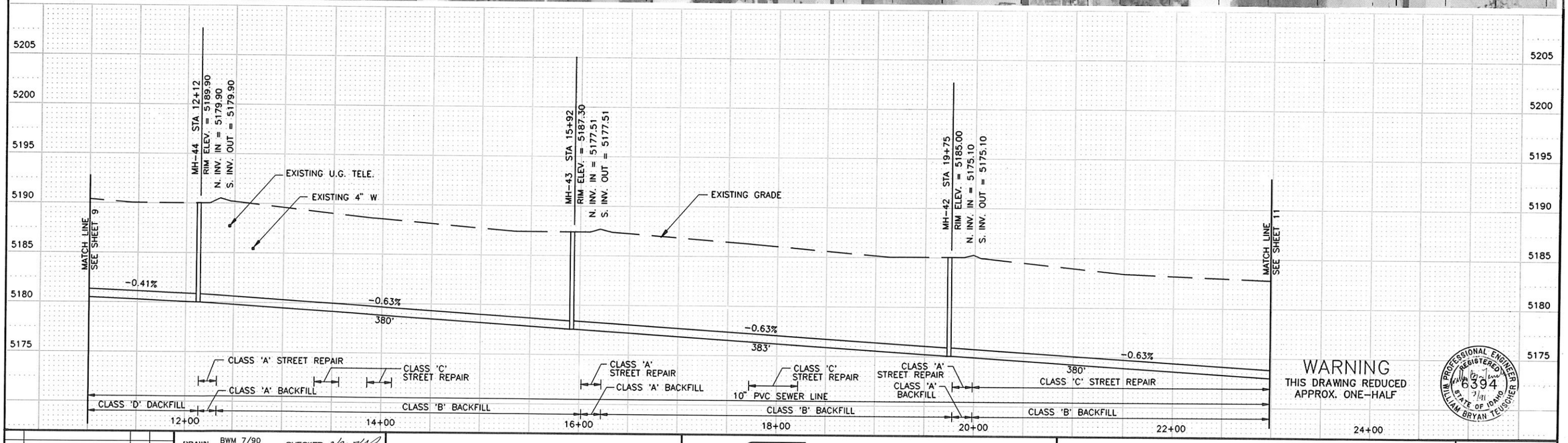

WARNING
THIS DRAWING REDUCED APPROX. ONE-HALF

WILLIAM BRYAN TEUSCHER
REGISTERED PROFESSIONAL ENGINEER
STATE OF IDAHO
6394
7/91

NO.	REVISIONS	BY	DATE

DRAWN BWM 7/90 DATE — CHECKED DATE
DESIGNED 3/91 DATE — PROJECT ENGINEER
APPROVED 3/91 DATE — PROJECT MANAGER

CITY OF BELLEVUE, IDAHO

FORSGREN ASSOCIATES / P.A.

WASTEWATER COLLECTION AND TREATMENT FACILITIES

2ND STREET

PROJECT NO. 89067

SHEET NO. 10



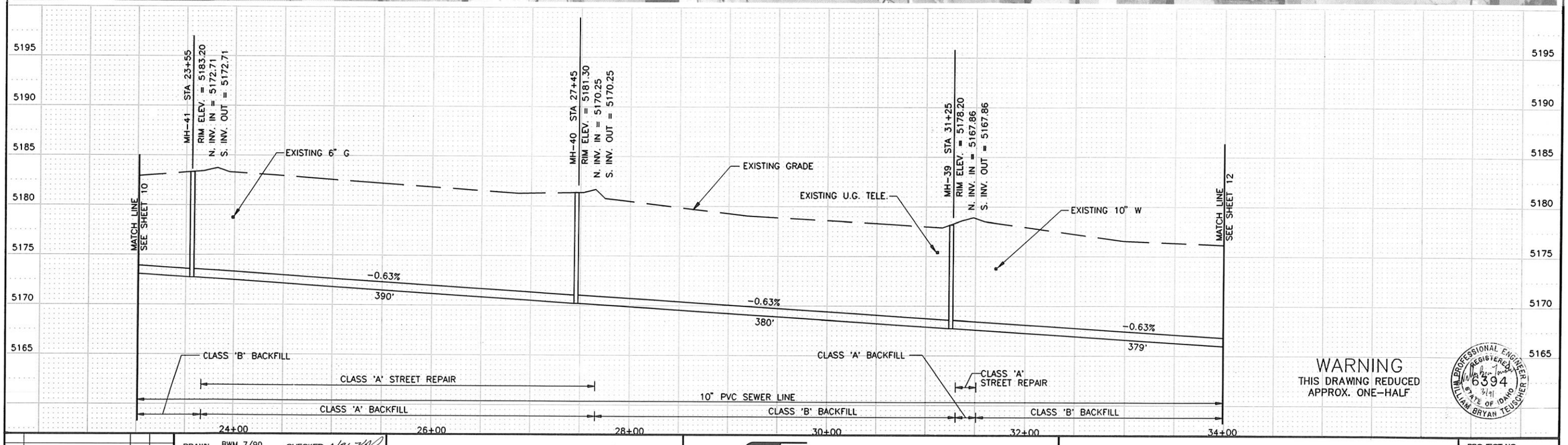

WARNING
THIS DRAWING REDUCED
APPROX. ONE-HALF

REGISTERED PROFESSIONAL ENGINEER
6394
3/91
STATE OF IDAHO
WILLIAM BRYAN TEUSCHER

NO.	REVISIONS	BY	DATE

DRAWN BWM 7/90 DATE — CHECKED 3/91 DATE
DESIGNED 3/91 DATE — PROJECT ENGINEER
APPROVED 3/91 DATE — PROJECT MANAGER

CITY OF BELLEVUE,
IDAHO

FORSGREN ASSOCIATES / P.A.

WASTEWATER COLLECTION AND TREATMENT FACILITIES

2ND STREET

PROJECT NO. 89067

SHEET NO. 11



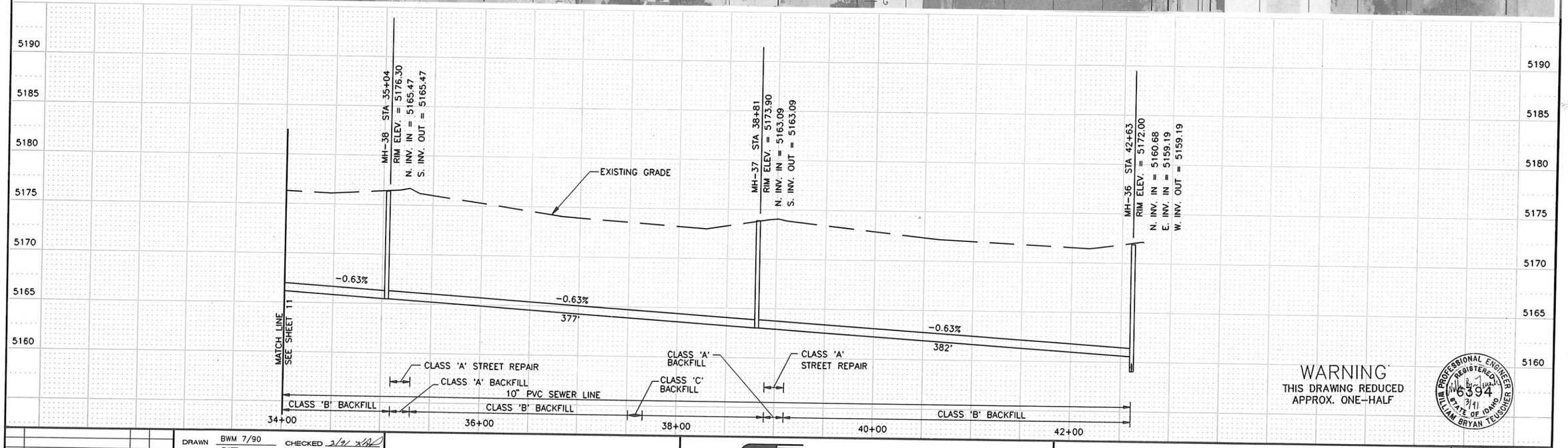

WARNING
THIS DRAWING REDUCED
APPROX. ONE-HALF

WILLIAM PROFESSIONAL ENGINEER REGISTERED 6394 STATE OF IDAHO 3/91 WILLIAM BRYAN TEUSCHER

NO.	REVISIONS	BY	DATE

DRAWN BWM 7/90 DATE CHECKED 3/91 DATE
DESIGNED 3/91 DATE PROJECT ENGINEER
APPROVED 3/91 DATE PROJECT MANAGER

CITY OF BELLEVUE,
IDAHO

FORSGREN ASSOCIATES / P.A.

WASTEWATER COLLECTION AND TREATMENT FACILITIES

2ND STREET

PROJECT NO. 89067

SHEET NO. 12



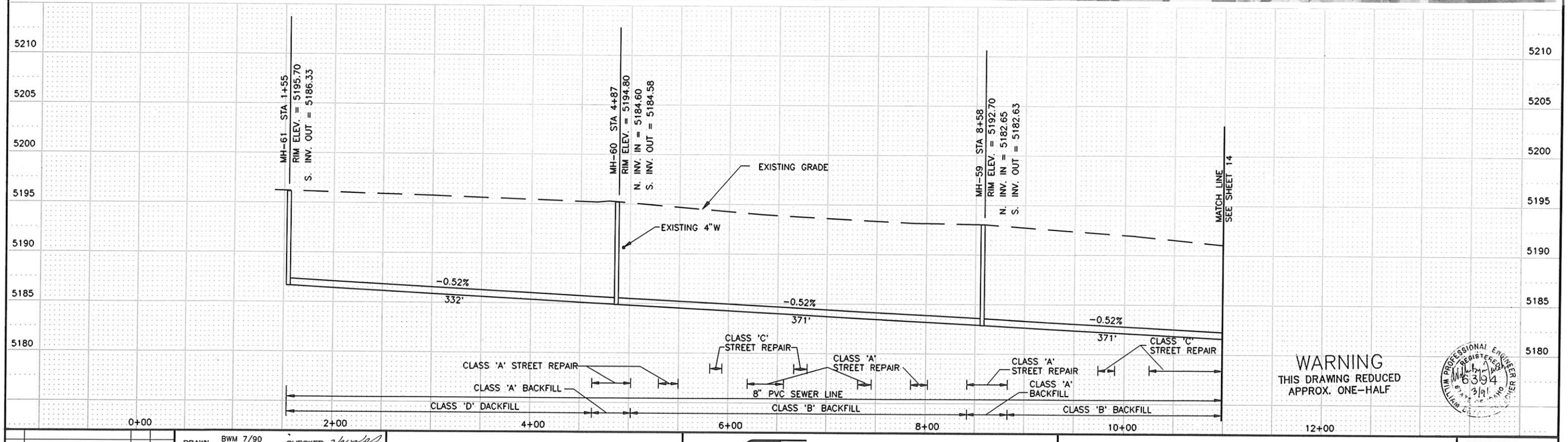

WARNING
THIS DRAWING REDUCED
APPROX. ONE-HALF

PROFESSIONAL ENGINEER
REGISTERED
6394
3/91
STATE OF IDAHO

NO.	REVISIONS	BY	DATE

DRAWN BWM 7/90 DATE — CHECKED 3/91 DATE
DESIGNED 3/91 DATE — PROJECT ENGINEER
APPROVED 3/91 DATE — PROJECT MANAGER

CITY OF BELLEVUE,
IDAHO

FORSGREN
ASSOCIATES / P.A.

WASTEWATER COLLECTION AND TREATMENT FACILITIES

3RD STREET

PROJECT NO. 89067

SHEET NO. 13



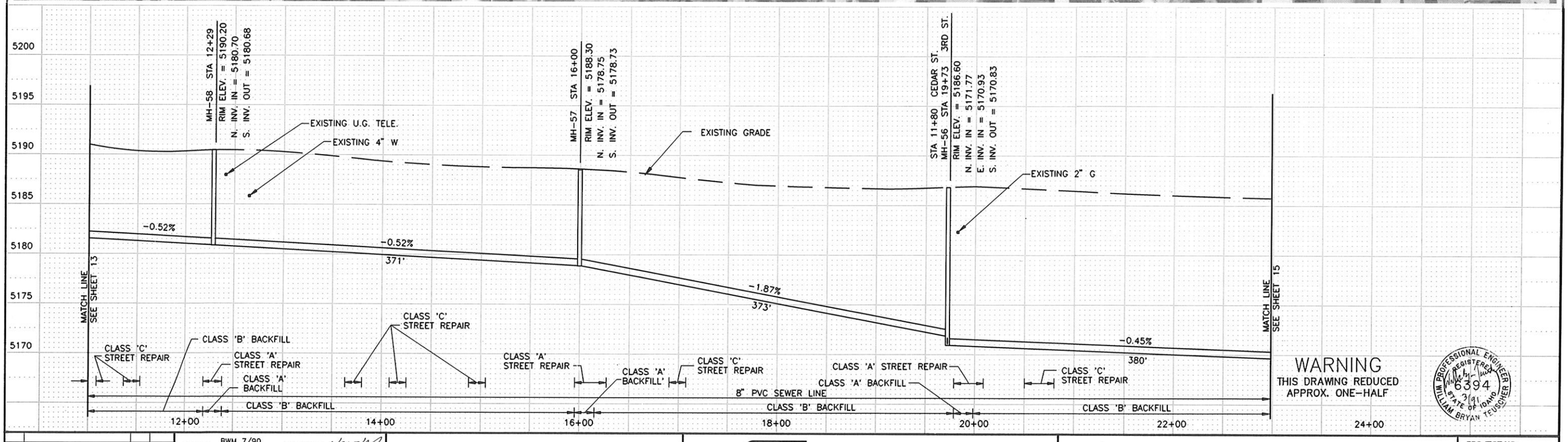

WARNING
THIS DRAWING REDUCED APPROX. ONE-HALF

NO.	REVISIONS	BY	DATE

DRAWN BWM 7/90 DATE — CHECKED 2/91 DATE
DESIGNED 3/91 DATE — PROJECT ENGINEER
APPROVED 3/91 DATE — PROJECT MANAGER

CITY OF BELLEVUE, IDAHO

FORSGREN ASSOCIATES / P.A.

WASTEWATER COLLECTION AND TREATMENT FACILITIES

3RD STREET

PROJECT NO. 89067

SHEET NO. 14



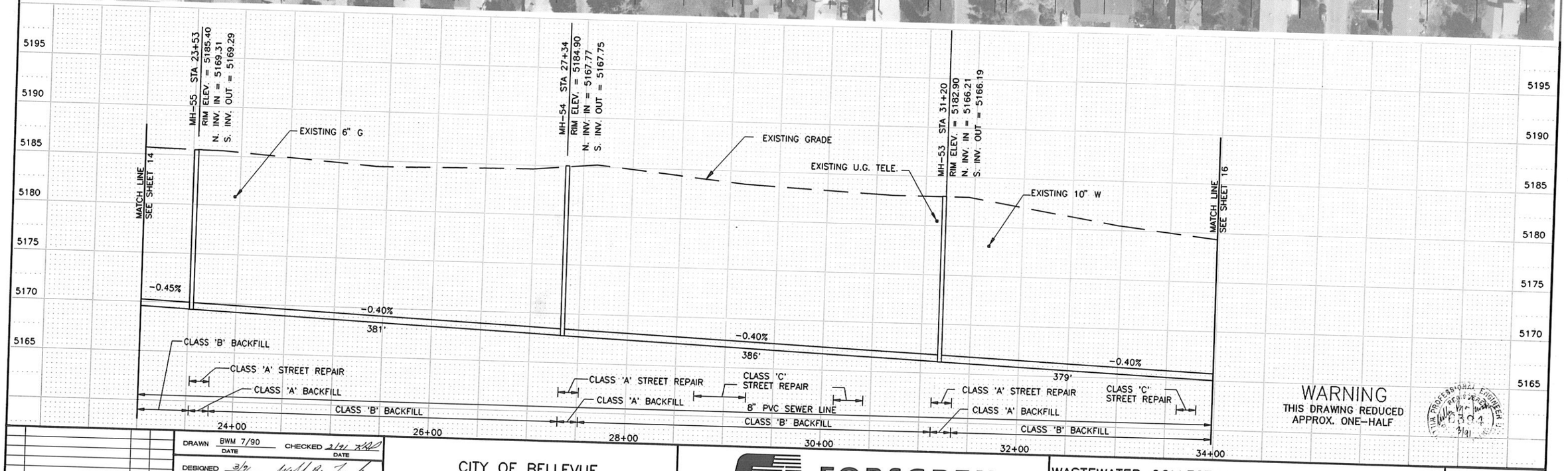

WARNING
THIS DRAWING REDUCED
APPROX. ONE-HALF

NO.	REVISIONS	BY	DATE

DRAWN BWM 7/90 DATE — CHECKED 3/91 DATE
DESIGNED 3/91 DATE — PROJECT ENGINEER
APPROVED 3/91 DATE — PROJECT MANAGER

CITY OF BELLEVUE,
IDAHO

FORSGREN
ASSOCIATES / P.A.

WASTEWATER COLLECTION AND TREATMENT FACILITIES

3RD STREET

PROJECT NO. 89067

SHEET NO. 15



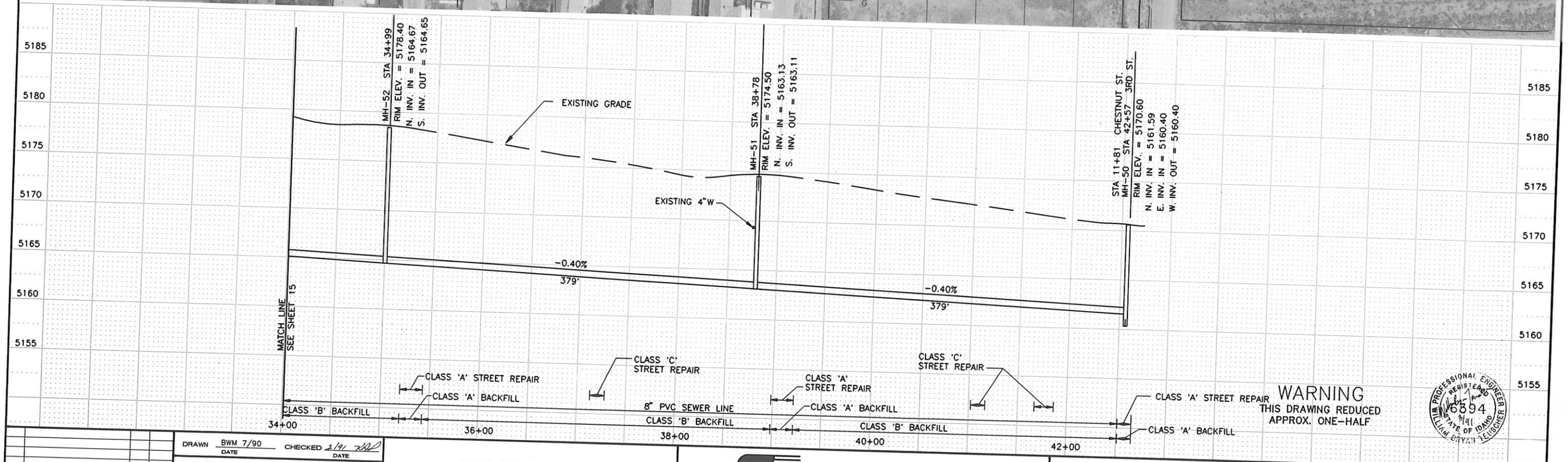

WARNING
THIS DRAWING REDUCED
APPROX. ONE-HALF

NO.	REVISIONS	BY	DATE

DRAWN BWM 7/90 DATE
CHECKED 3/91 DATE
DESIGNED 3/91 DATE PROJECT ENGINEER
APPROVED 3/91 DATE PROJECT MANAGER

CITY OF BELLEVUE,
IDAHO

FORSGREN ASSOCIATES / P.A.

WASTEWATER COLLECTION AND TREATMENT FACILITIES

3RD STREET

PROJECT NO. 89067

SHEET NO. 16



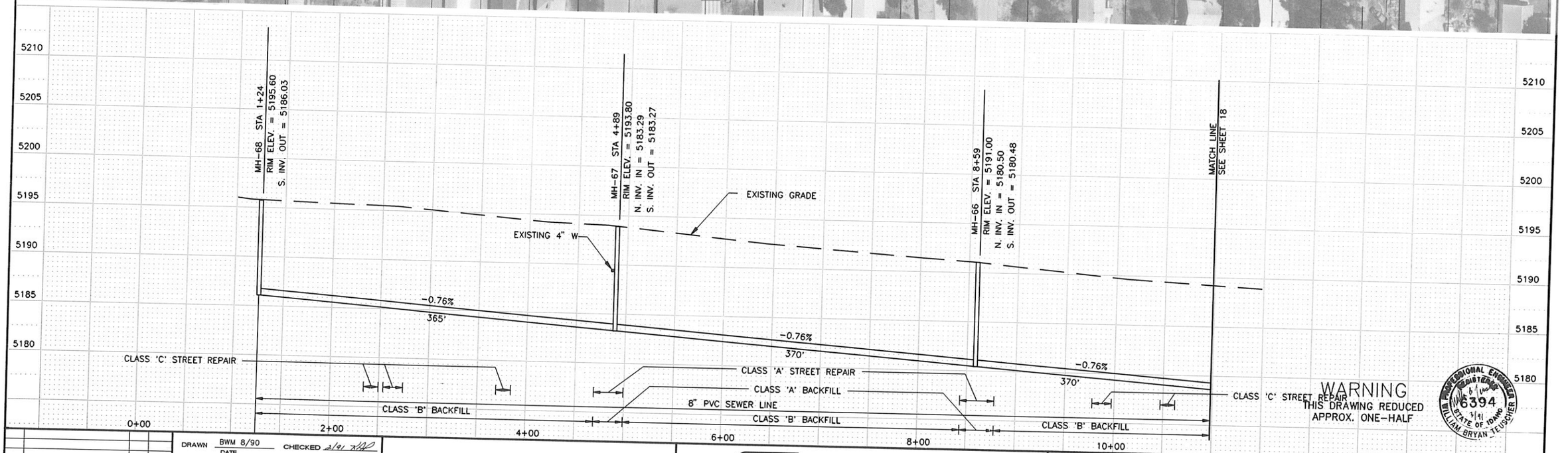

WARNING
THIS DRAWING REDUCED
APPROX. ONE-HALF

PROFESSIONAL ENGINEER REGISTERED 6394 STATE OF IDAHO WILLIAM BRYAN TEUSCHER

NO.	REVISIONS	BY	DATE

DRAWN BWM 8/90 DATE
CHECKED 2/91 DATE
DESIGNED 3/91 DATE PROJECT ENGINEER
APPROVED 3/91 DATE PROJECT MANAGER

CITY OF BELLEVUE,
IDAHO

FORSGREN ASSOCIATES / P.A.

WASTEWATER COLLECTION AND TREATMENT FACILITIES

4TH STREET

PROJECT NO. 89067

SHEET NO. 17



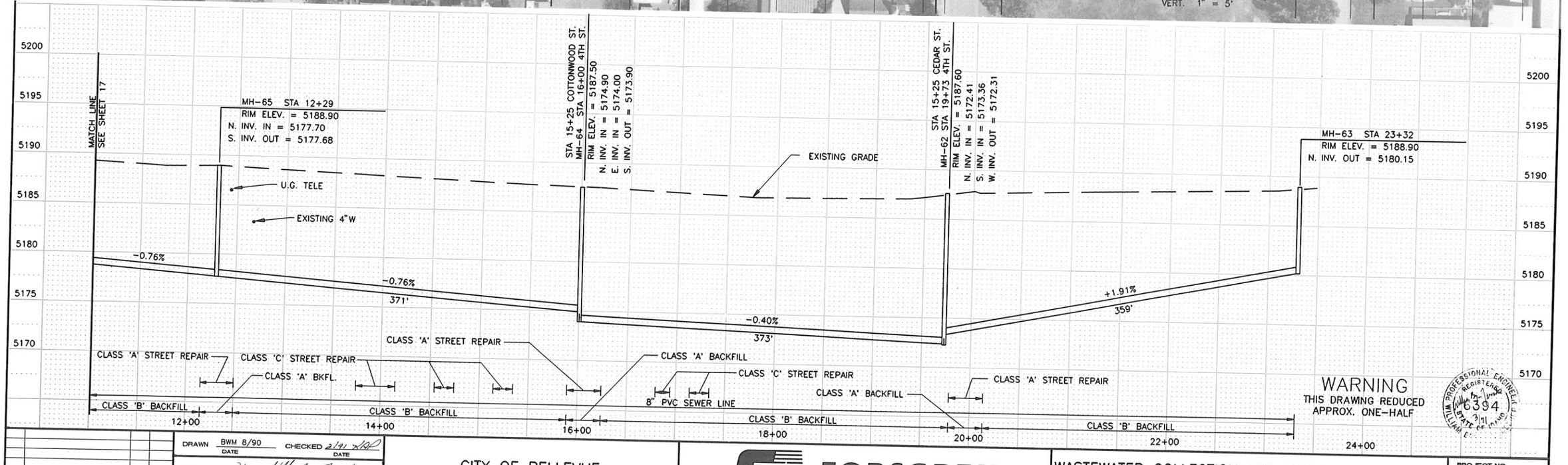

WARNING
THIS DRAWING REDUCED
APPROX. ONE-HALF

NO.	REVISIONS	BY	DATE

DRAWN BWM 8/90 DATE — CHECKED 3/91 DATE
DESIGNED 3/91 DATE — PROJECT ENGINEER
APPROVED 3/91 DATE — PROJECT MANAGER

CITY OF BELLEVUE,
IDAHO

FORSGREN
ASSOCIATES / P.A.

WASTEWATER COLLECTION AND TREATMENT FACILITIES

4TH STREET

PROJECT NO. 89067

SHEET NO. 18



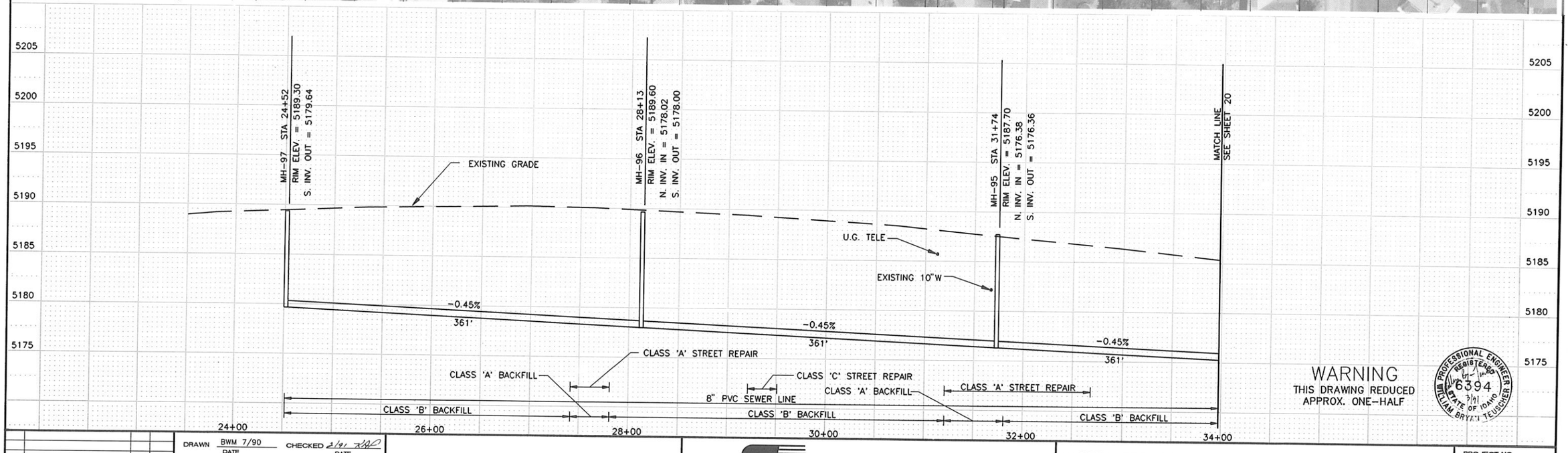

WARNING
THIS DRAWING REDUCED
APPROX. ONE-HALF

PROFESSIONAL ENGINEER REGISTERED 6394 STATE OF IDAHO WILLIAM BRYAN TEUSCHER 3/91

NO.	REVISIONS	BY	DATE

DRAWN BWM 7/90 DATE — CHECKED 3/91 DATE

DESIGNED 3/91 DATE — PROJECT ENGINEER

APPROVED 3/91 DATE — PROJECT MANAGER

CITY OF BELLEVUE,
IDAHO

FORSGREN ASSOCIATES / P.A.

WASTEWATER COLLECTION AND TREATMENT FACILITIES

4TH STREET

PROJECT NO. 89067

SHEET NO. 19

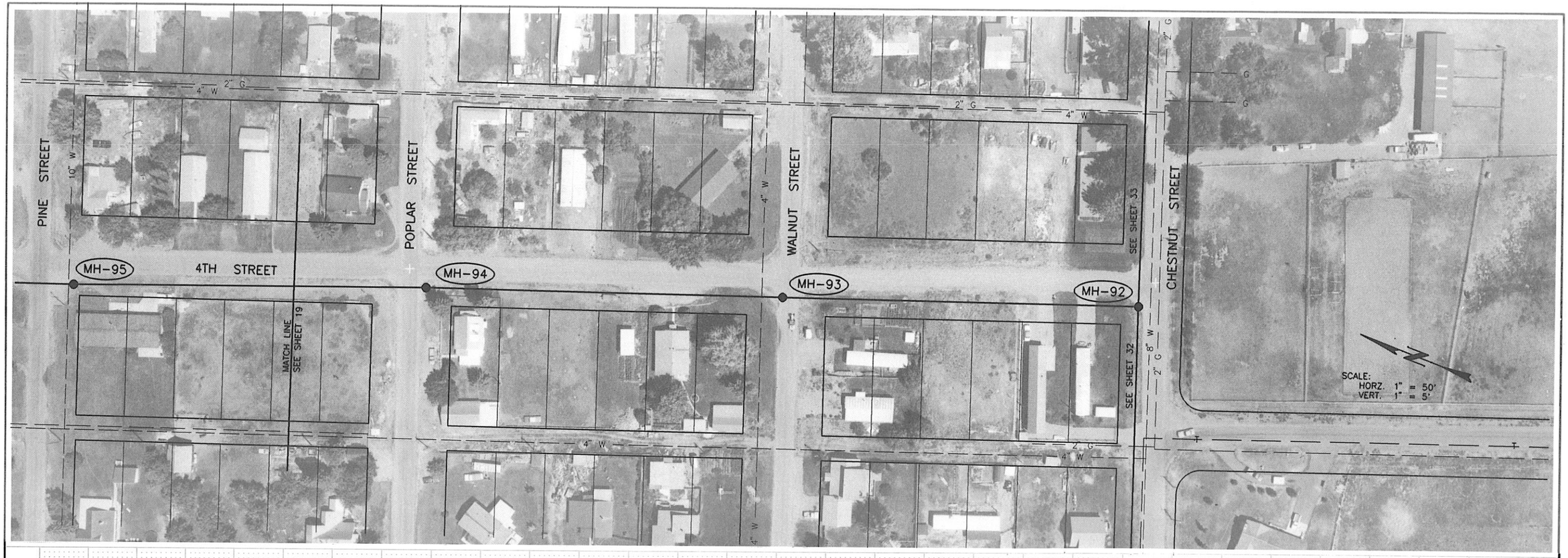

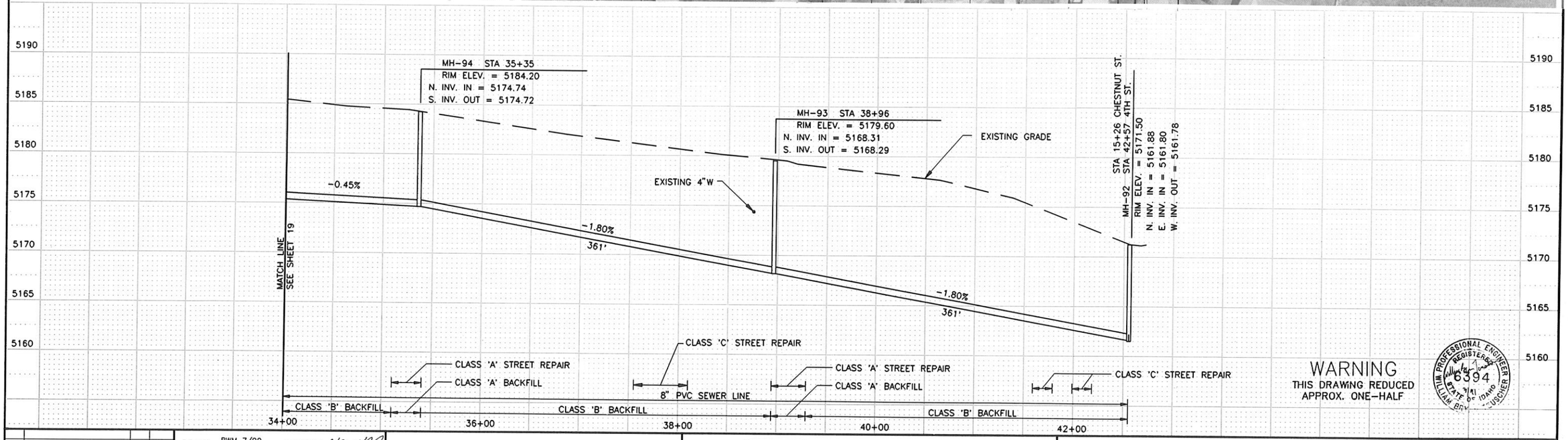

WARNING
THIS DRAWING REDUCED
APPROX. ONE-HALF

WILLIAM BRYAN PROFESSIONAL ENGINEER REGISTERED STATE OF IDAHO 6394

NO.	REVISIONS	BY	DATE

DRAWN BWM 7/90 DATE CHECKED 3/91 DATE
DESIGNED 3/91 DATE PROJECT ENGINEER
APPROVED 3/91 DATE PROJECT MANAGER

CITY OF BELLEVUE,
IDAHO

FORSGREN ASSOCIATES / P.A.

WASTEWATER COLLECTION AND TREATMENT FACILITIES

4TH STREET

PROJECT NO. 89067

SHEET NO. 20



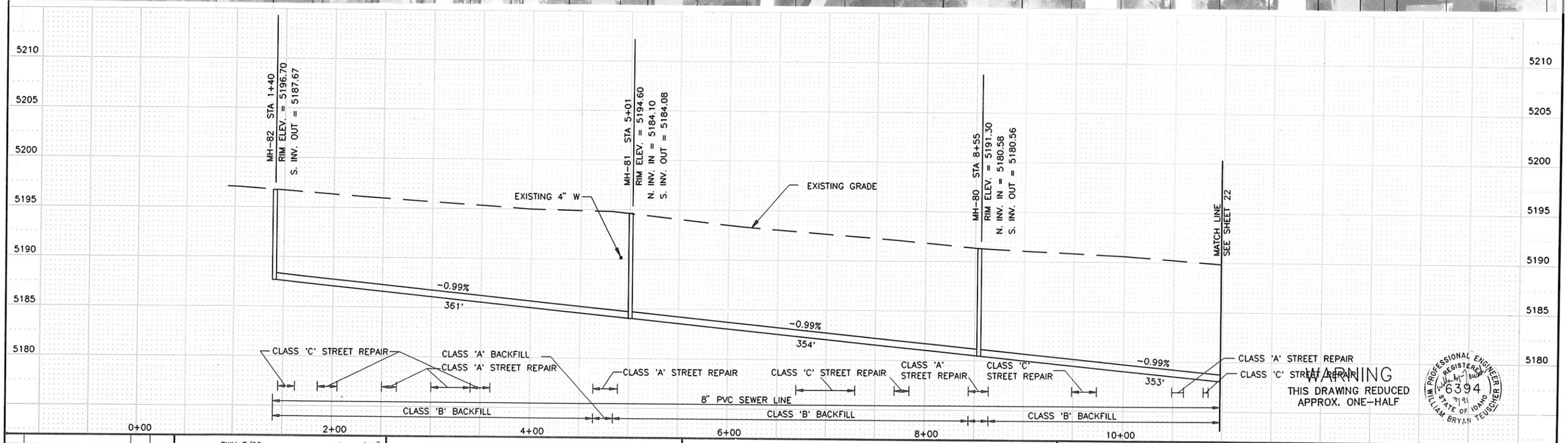

WARNING
THIS DRAWING REDUCED
APPROX. ONE-HALF

PROFESSIONAL ENGINEER REGISTERED 6394 STATE OF IDAHO WILLIAM BRYAN TEUSCHER

NO.	REVISIONS	BY	DATE

DRAWN BWM 7/90 DATE CHECKED DATE

DESIGNED 3/91 DATE PROJECT ENGINEER

APPROVED 3/91 DATE PROJECT MANAGER

CITY OF BELLEVUE,
IDAHO

FORSGREN ASSOCIATES / P.A.

WASTEWATER COLLECTION AND TREATMENT FACILITIES

5TH STREET

PROJECT NO. 89067

SHEET NO. 21

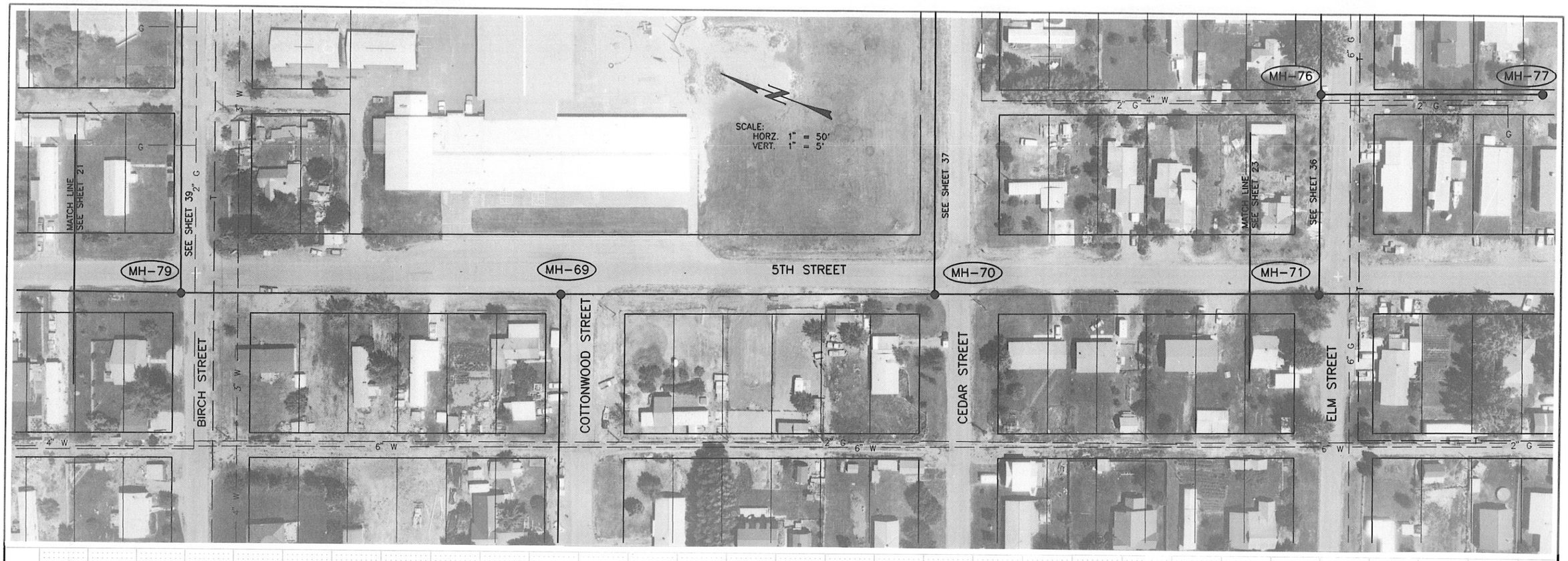

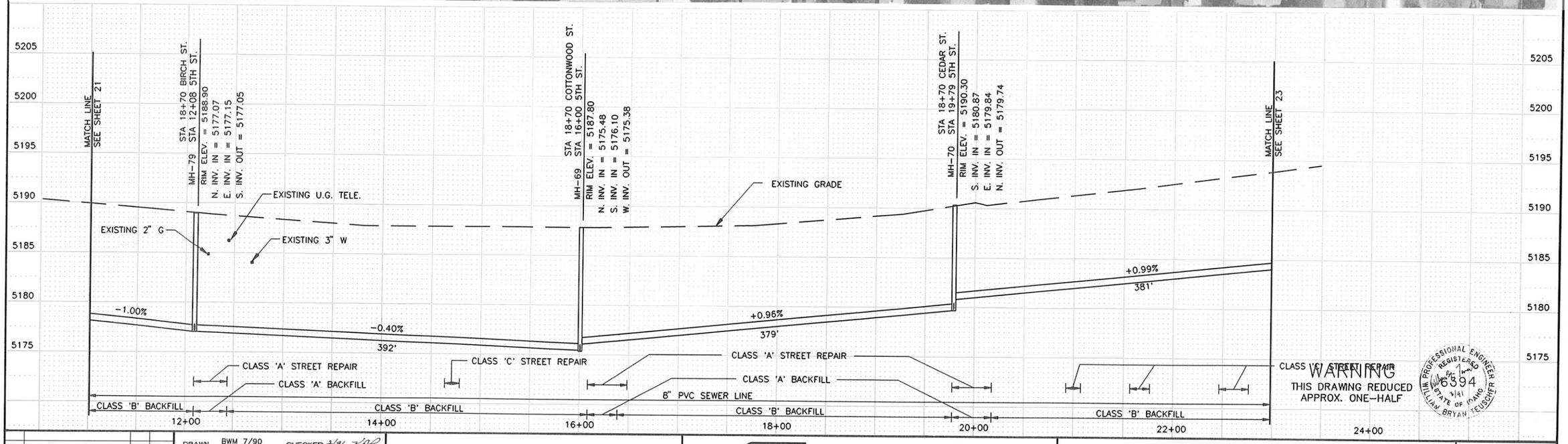

WARNING
THIS DRAWING REDUCED
APPROX. ONE-HALF

WILLIAM BRYAN TEUSCHER
REGISTERED PROFESSIONAL ENGINEER
6394
STATE OF IDAHO
3/91

NO.	REVISIONS	BY	DATE

DRAWN BWM 7/90 DATE — CHECKED 3/91 DATE

DESIGNED 3/91 DATE — PROJECT ENGINEER

APPROVED 3/91 DATE — PROJECT MANAGER

CITY OF BELLEVUE,
IDAHO

FORSGREN ASSOCIATES / P.A.

WASTEWATER COLLECTION AND TREATMENT FACILITIES

5TH STREET

PROJECT NO. 89067

SHEET NO. 22



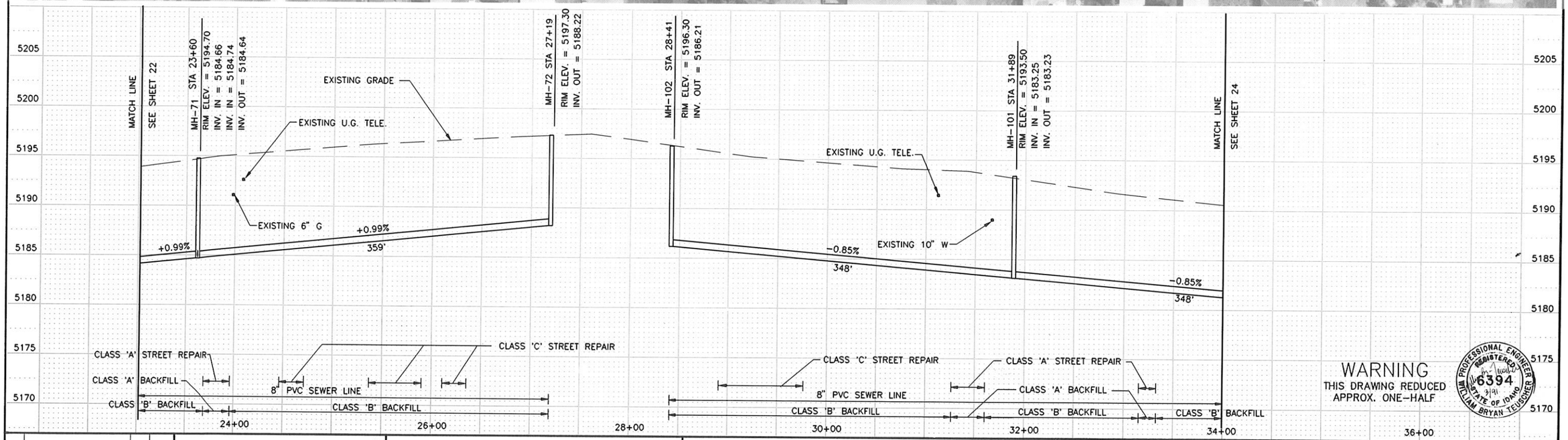

WARNING
THIS DRAWING REDUCED
APPROX. ONE-HALF

WILLIAM PROFESSIONAL ENGINEER REGISTERED 6394 STATE OF IDAHO WILLIAM BRYAN TELSCHER 3/91

NO.	REVISIONS	BY	DATE

DRAWN BJK 11-90 DATE — CHECKED 2/91 DATE

DESIGNED 3/91 DATE — PROJECT ENGINEER

APPROVED 3/91 DATE — PROJECT MANAGER

CITY OF BELLEVUE,
IDAHO

FORSGREN ASSOCIATES / P.A.

WASTEWATER COLLECTION AND TREATMENT FACILITIES

5TH STREET

PROJECT NO. 89067

SHEET NO. 23



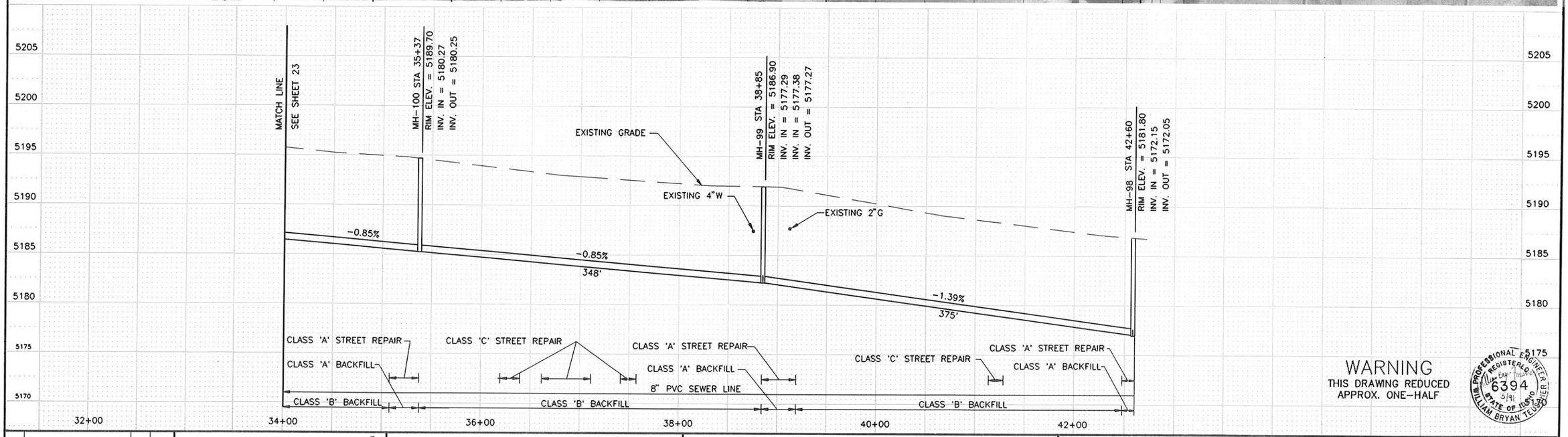

WARNING
THIS DRAWING REDUCED
APPROX. ONE-HALF

PROFESSIONAL ENGINEER
REGISTERED
6394
3/91
STATE OF IDAHO
WILLIAM BRYAN TEUSCHER

NO.	REVISIONS	BY	DATE

DRAWN BJK 11-90 DATE — CHECKED 3/91 DATE
DESIGNED 3/91 DATE — PROJECT ENGINEER
APPROVED 3/91 DATE — PROJECT MANAGER

CITY OF BELLEVUE,
IDAHO

FORSGREN
ASSOCIATES / P.A.

WASTEWATER COLLECTION AND TREATMENT FACILITIES

5TH STREET

PROJECT NO. 89067

SHEET NO. 24

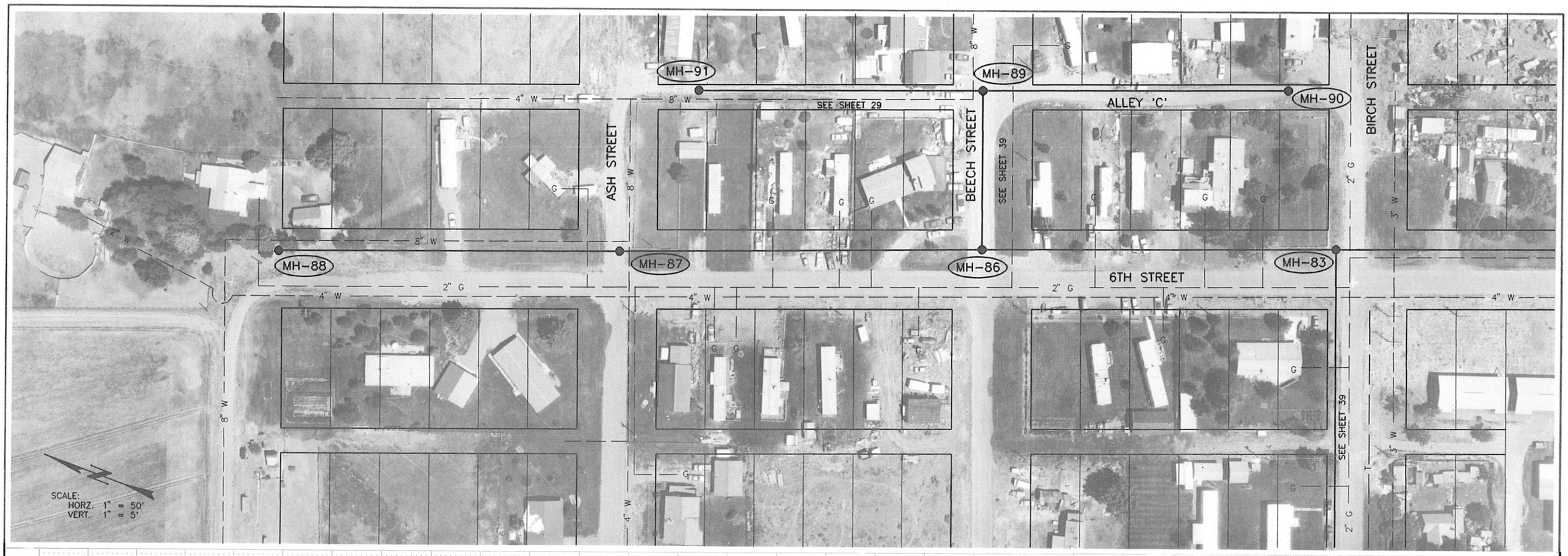

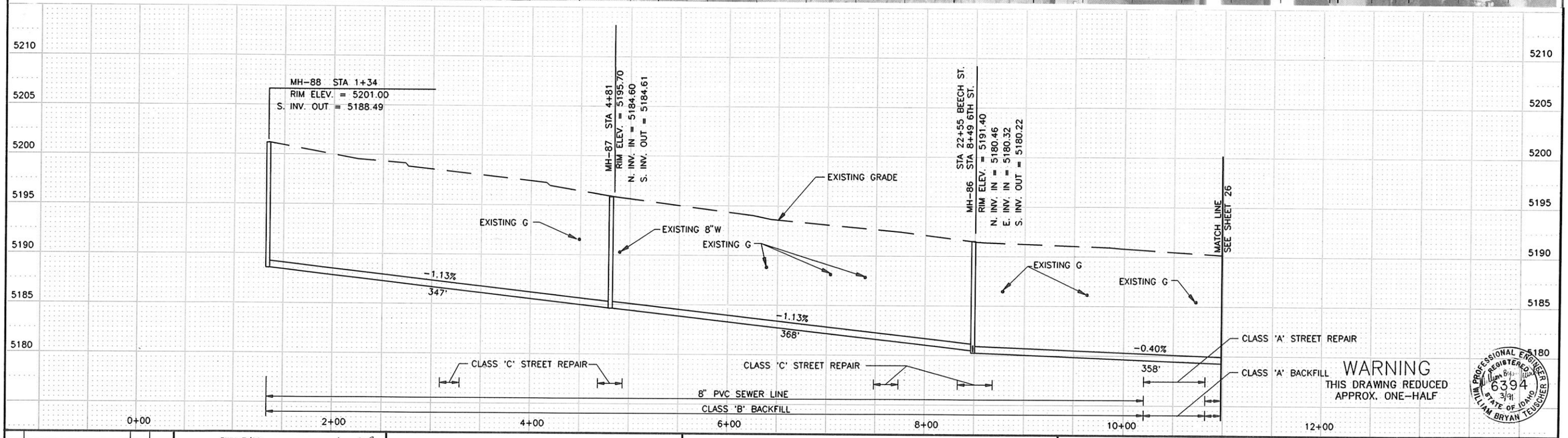

WARNING
THIS DRAWING REDUCED
APPROX. ONE-HALF

PROFESSIONAL ENGINEER
REGISTERED
6394
3/91
STATE OF IDAHO
WILLIAM BRYAN TEUSCHER

NO.	REVISIONS	BY	DATE

DRAWN BWM 7/90 DATE — CHECKED DATE

DESIGNED 3/91 DATE — PROJECT ENGINEER

APPROVED 3/91 DATE — PROJECT MANAGER

CITY OF BELLEVUE,
IDAHO

FORSGREN
ASSOCIATES / P.A.

WASTEWATER COLLECTION AND TREATMENT FACILITIES

6TH STREET

PROJECT NO. 89067

SHEET NO. 25

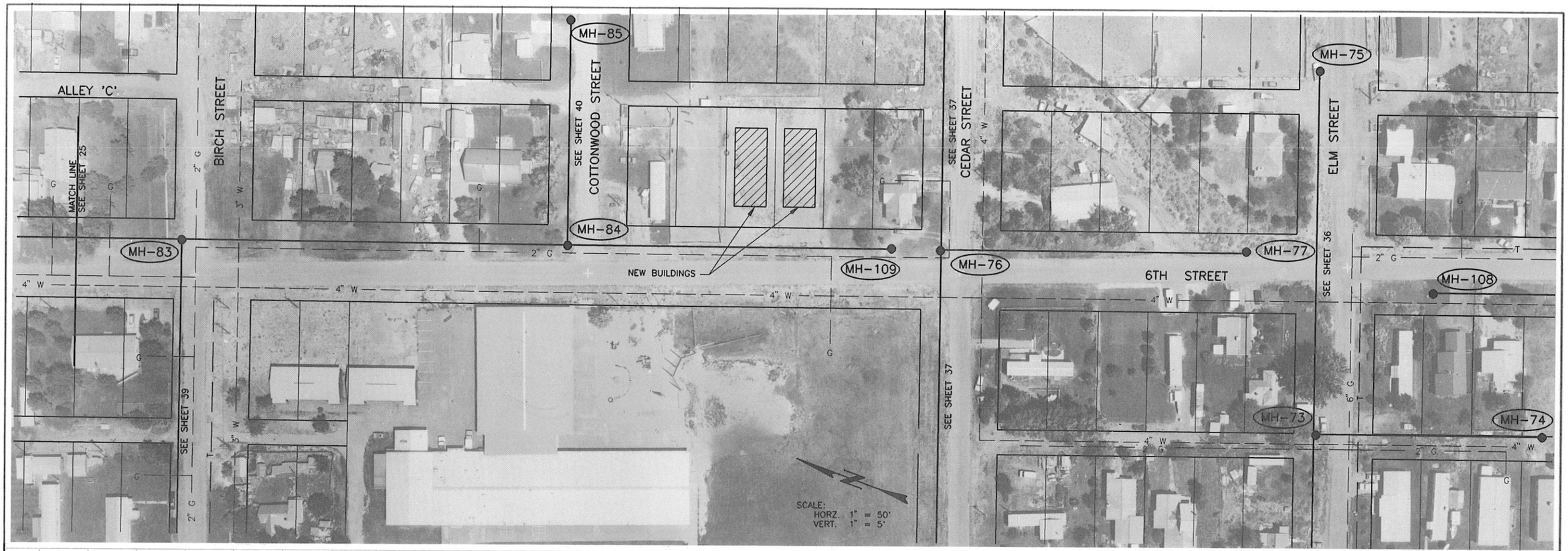

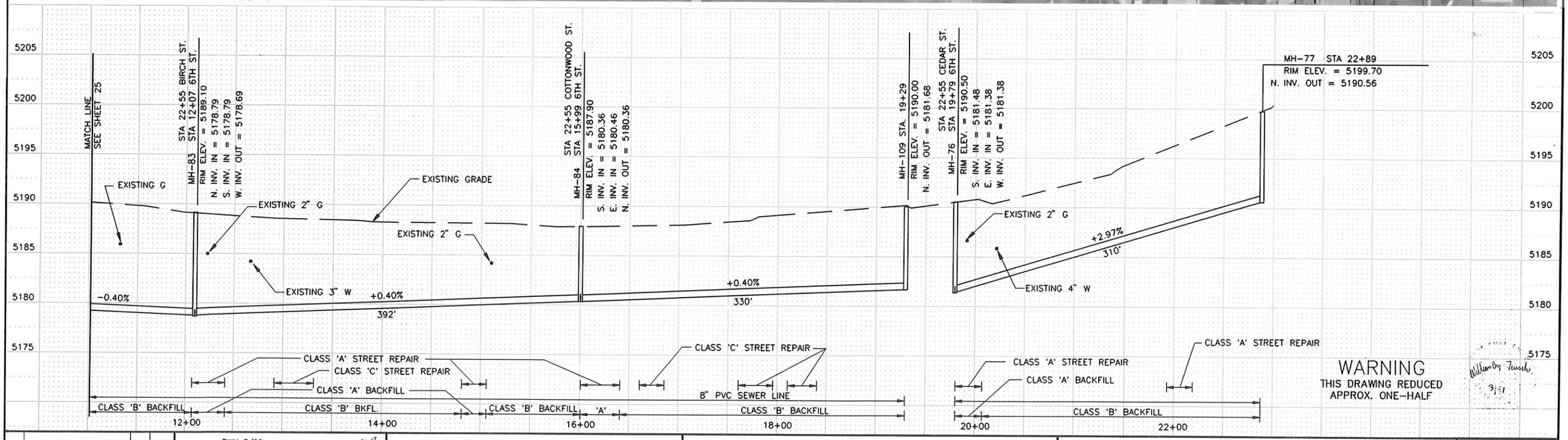

WARNING
THIS DRAWING REDUCED
APPROX. ONE-HALF

NO.	REVISIONS	BY	DATE

DRAWN BWM 8/90 DATE CHECKED 3/91 DATE
DESIGNED 3/91 DATE PROJECT ENGINEER
APPROVED 3/91 DATE PROJECT MANAGER

CITY OF BELLEVUE,
IDAHO

FORSGREN
ASSOCIATES / P.A.

WASTEWATER COLLECTION AND TREATMENT FACILITIES

6TH STREET

PROJECT NO. 89067

SHEET NO. 26



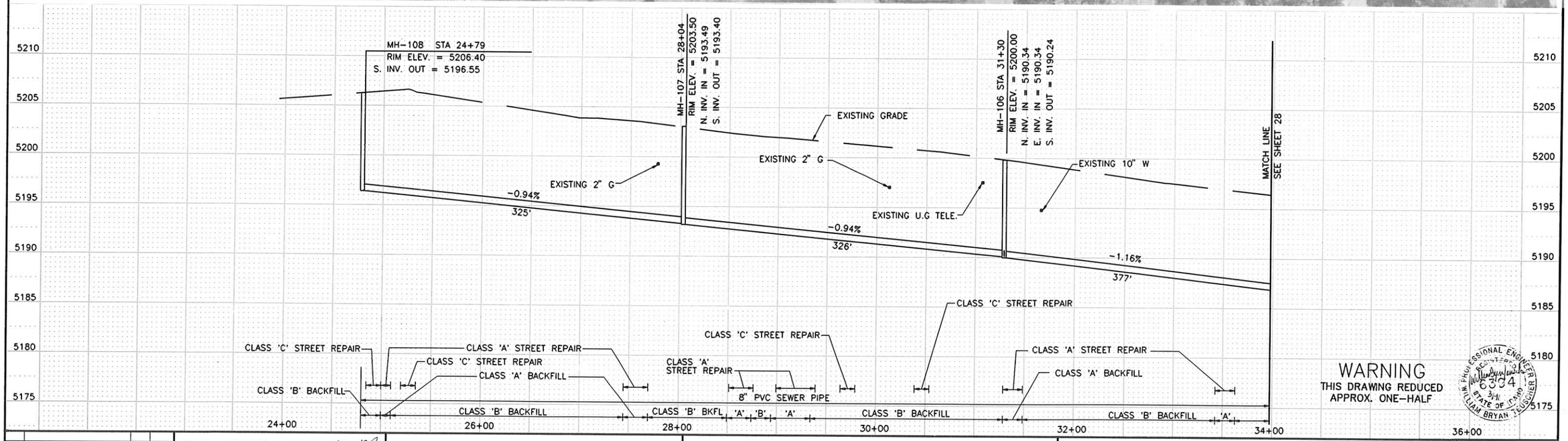

WARNING
THIS DRAWING REDUCED
APPROX. ONE-HALF

IN PROFESSIONAL ENGINEER REGISTERED 6554 STATE OF IDAHO WILLIAM BRYAN JOHNSON

NO.	REVISIONS	BY	DATE

DRAWN BJK 11-90 DATE — CHECKED 3/91 DATE
DESIGNED 3/91 DATE — PROJECT ENGINEER
APPROVED 3/91 DATE — PROJECT MANAGER

CITY OF BELLEVUE,
IDAHO

FORSGREN
ASSOCIATES / P.A.

WASTEWATER COLLECTION AND TREATMENT FACILITIES

PROJECT NO. 89067

SHEET NO. 27

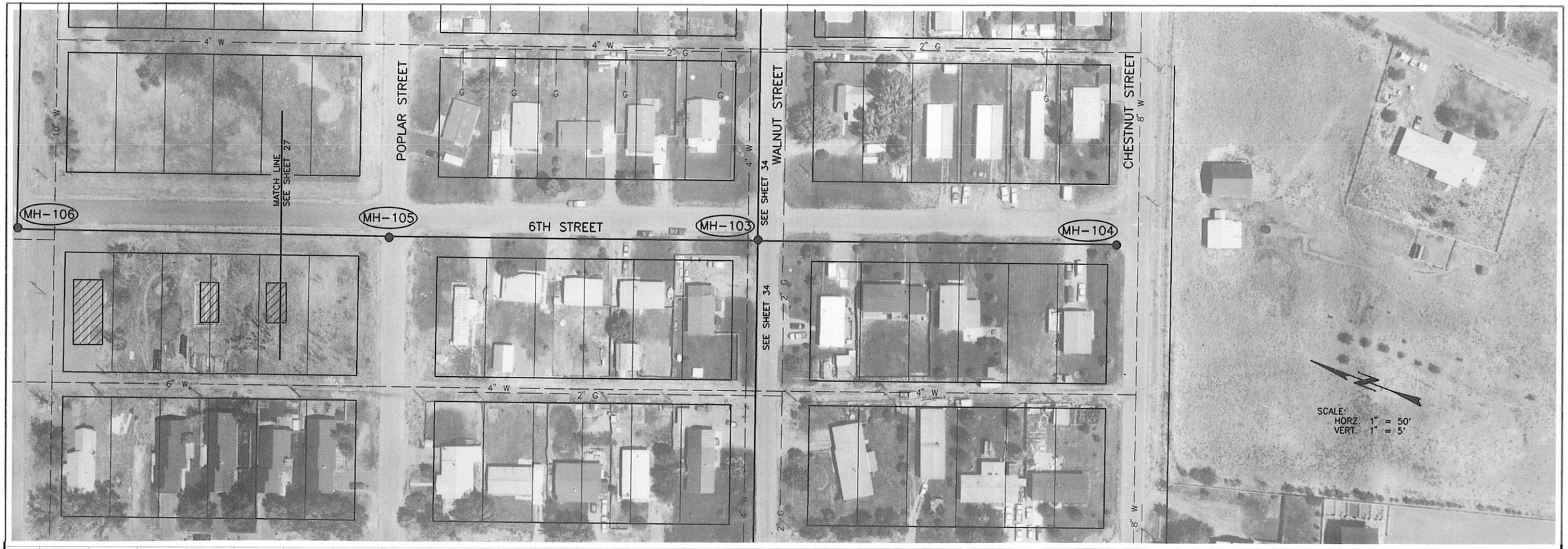

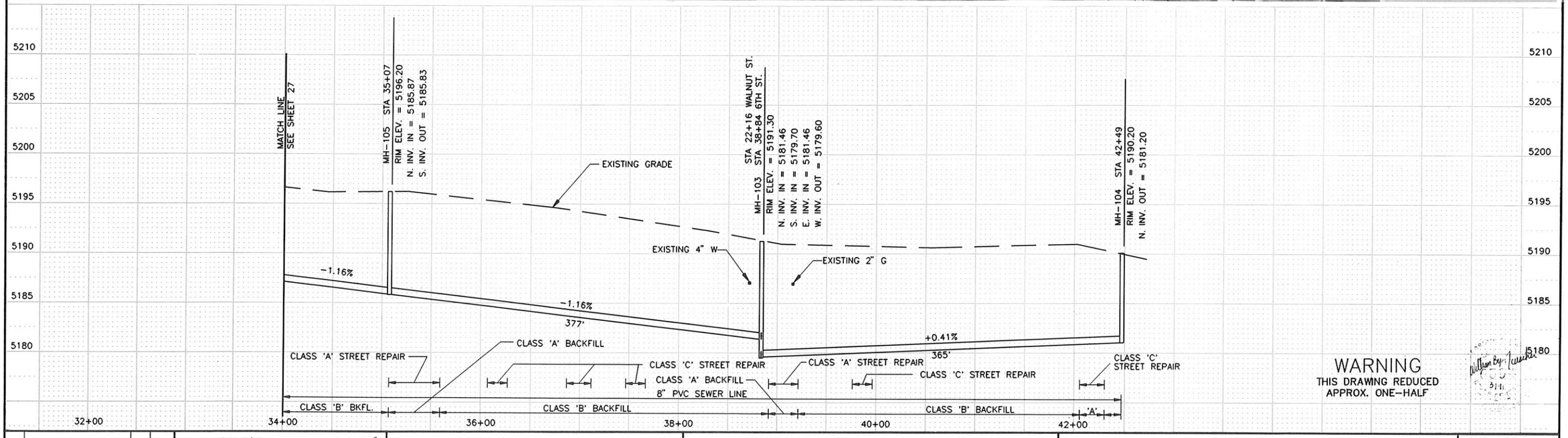

WARNING
THIS DRAWING REDUCED
APPROX. ONE-HALF

NO.	REVISIONS	BY	DATE

DRAWN BWM 7/90 DATE CHECKED 3/91 DATE
DESIGNED 3/91 DATE PROJECT ENGINEER
APPROVED 3/91 DATE PROJECT MANAGER

CITY OF BELLEVUE,
IDAHO

FORSGREN
ASSOCIATES / P.A.

WASTEWATER COLLECTION AND TREATMENT FACILITIES

6TH STREET

PROJECT NO. 89067

SHEET NO. 28



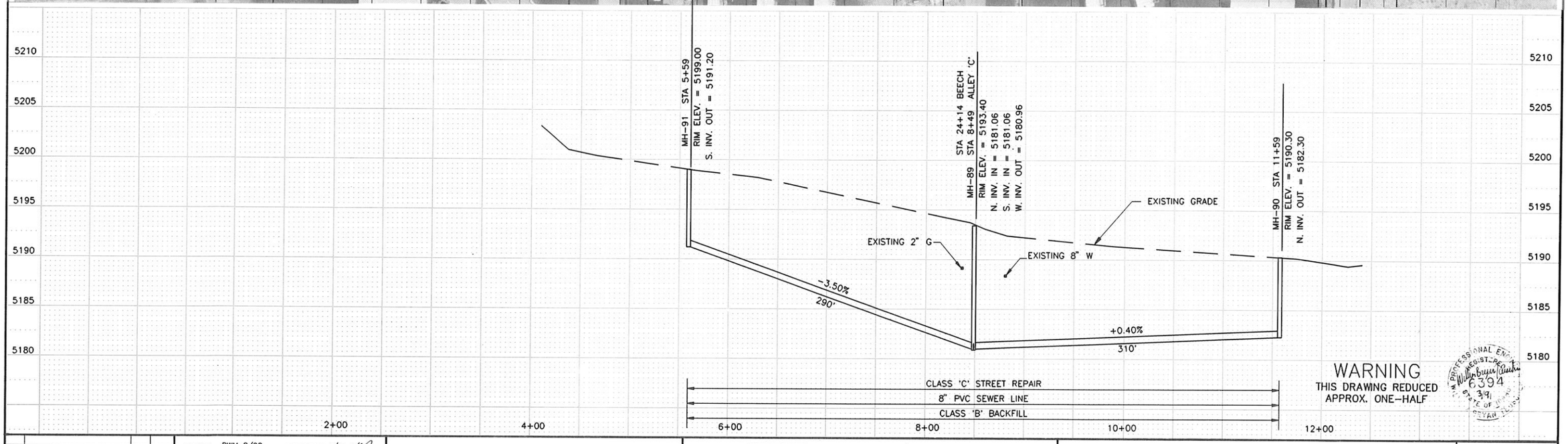

WARNING
THIS DRAWING REDUCED
APPROX. ONE-HALF

PROFESSIONAL ENGINEER
WILLIAM BRUCE MILLER
6394
3/91
STATE OF IDAHO

NO.	REVISIONS	BY	DATE

DRAWN BWM 8/90 DATE — CHECKED 3/91 DATE

DESIGNED 3/91 DATE — PROJECT ENGINEER

APPROVED 3/91 DATE — PROJECT MANAGER

CITY OF BELLEVUE,
IDAHO

FORSGREN
ASSOCIATES / P.A.

WASTEWATER COLLECTION AND TREATMENT FACILITIES

ALLEY 'C'

PROJECT NO. 89067

SHEET NO. 29

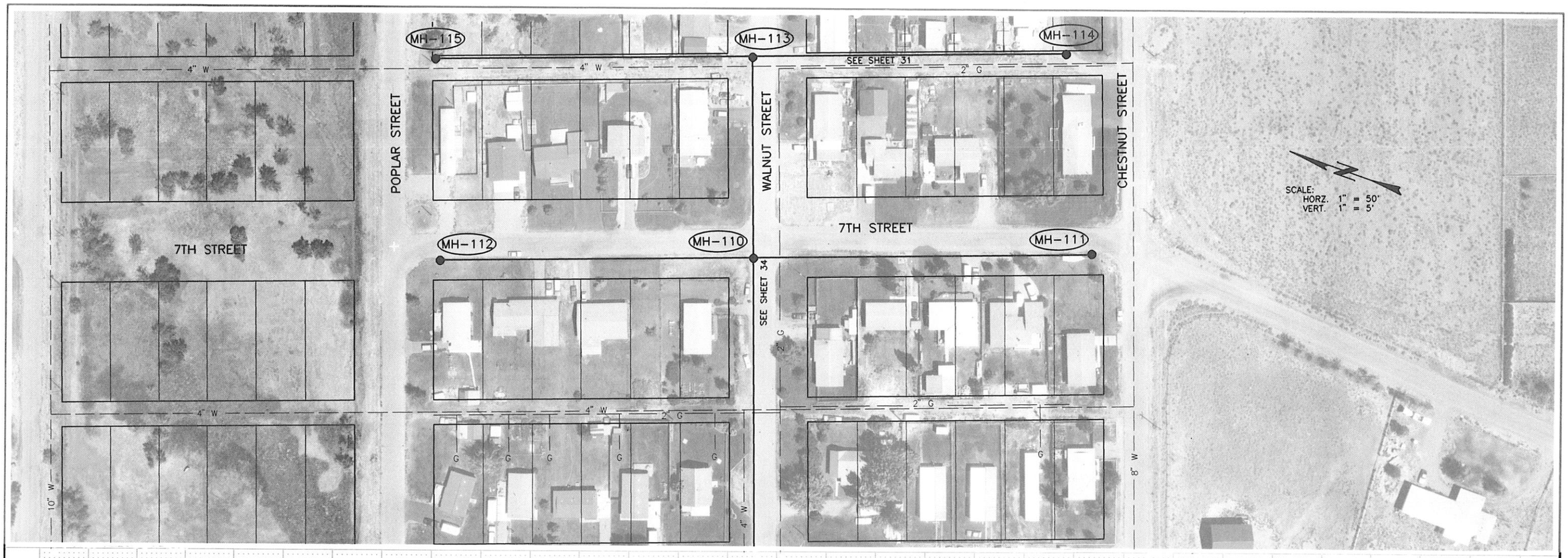

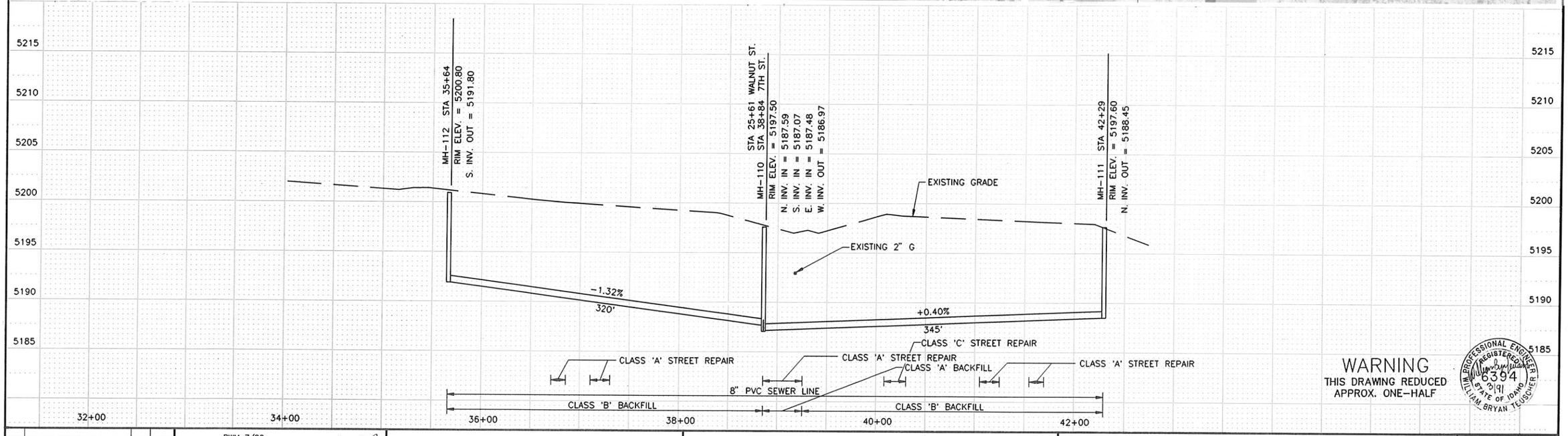

WARNING
THIS DRAWING REDUCED
APPROX. ONE-HALF

PROFESSIONAL ENGINEER REGISTERED 3/91 6394 STATE OF IDAHO WILLIAM BRYAN TELSCHER

NO.	REVISIONS	BY	DATE

DRAWN BWM 7/90 DATE — CHECKED DATE
DESIGNED 3/91 DATE — PROJECT ENGINEER
APPROVED 3/91 DATE — PROJECT MANAGER

CITY OF BELLEVUE,
IDAHO

FORSGREN ASSOCIATES / P.A.

WASTEWATER COLLECTION AND TREATMENT FACILITIES

7TH STREET

PROJECT NO. 89067

SHEET NO. 30

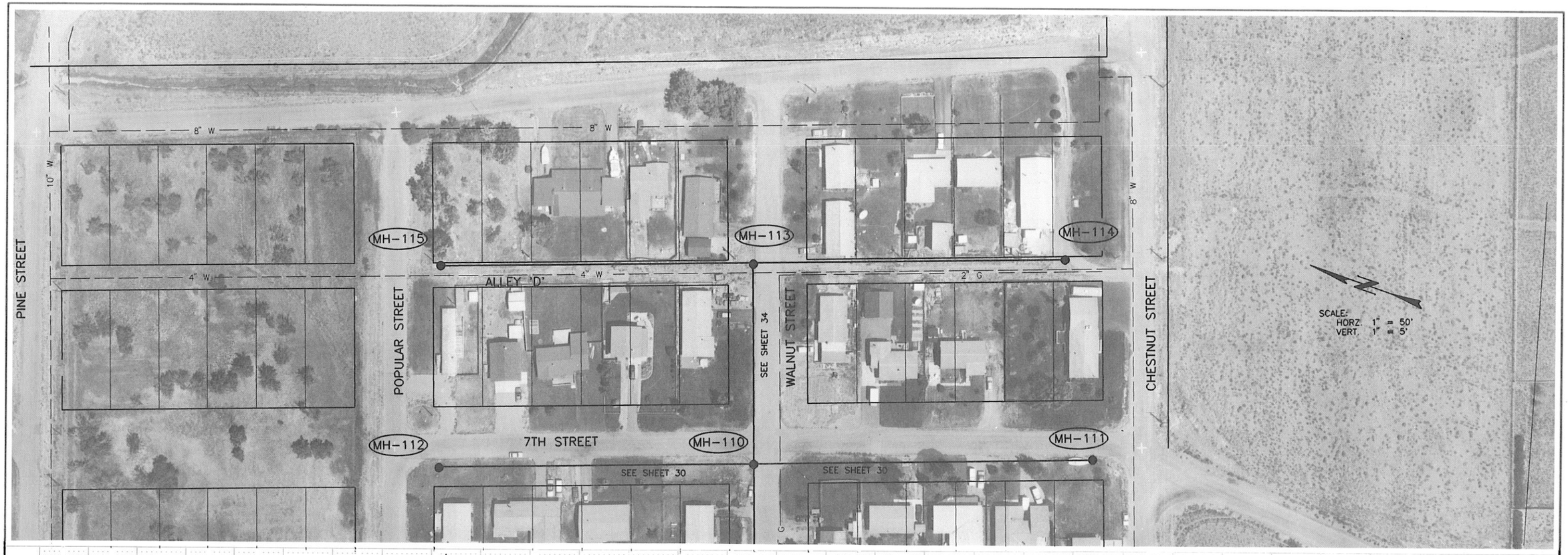

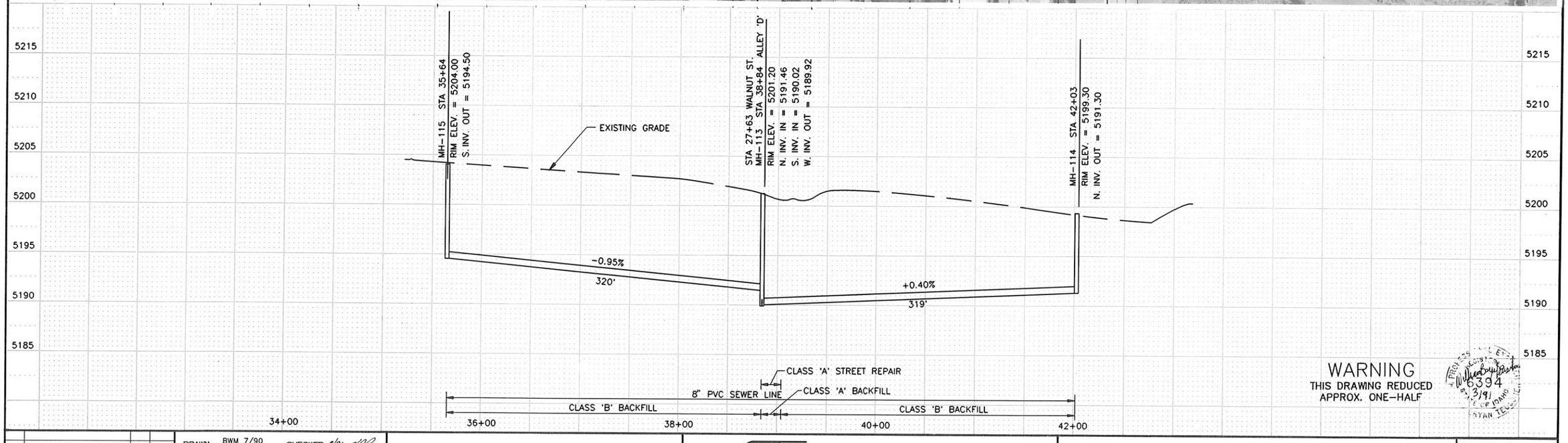

WARNING
THIS DRAWING REDUCED
APPROX. ONE-HALF

6394
3/91
STATE OF IDAHO
BRYAN TESTER

NO.	REVISIONS	BY	DATE

DRAWN BWM 7/90 DATE CHECKED 3/91 DATE
DESIGNED 3/91 DATE PROJECT ENGINEER
APPROVED 3/91 DATE PROJECT MANAGER

CITY OF BELLEVUE,
IDAHO

FORSGREN ASSOCIATES / P.A.

WASTEWATER COLLECTION AND TREATMENT FACILITIES

ALLEY 'D'

PROJECT NO. 89067

SHEET NO. 31

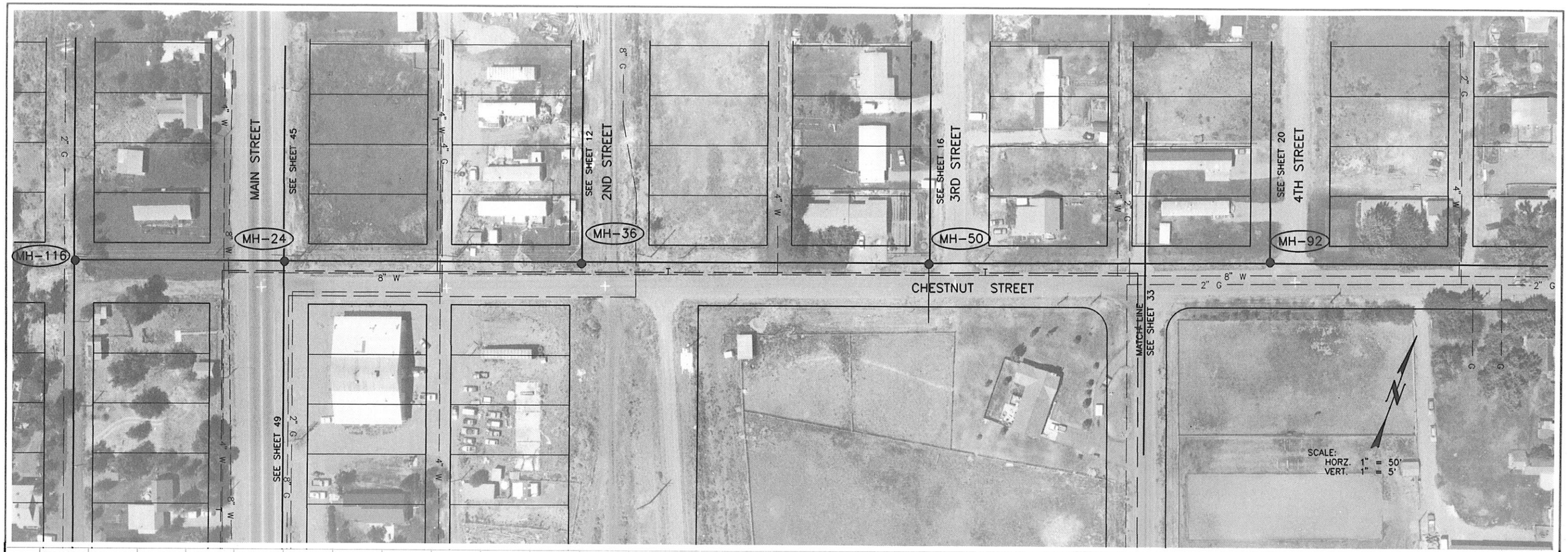

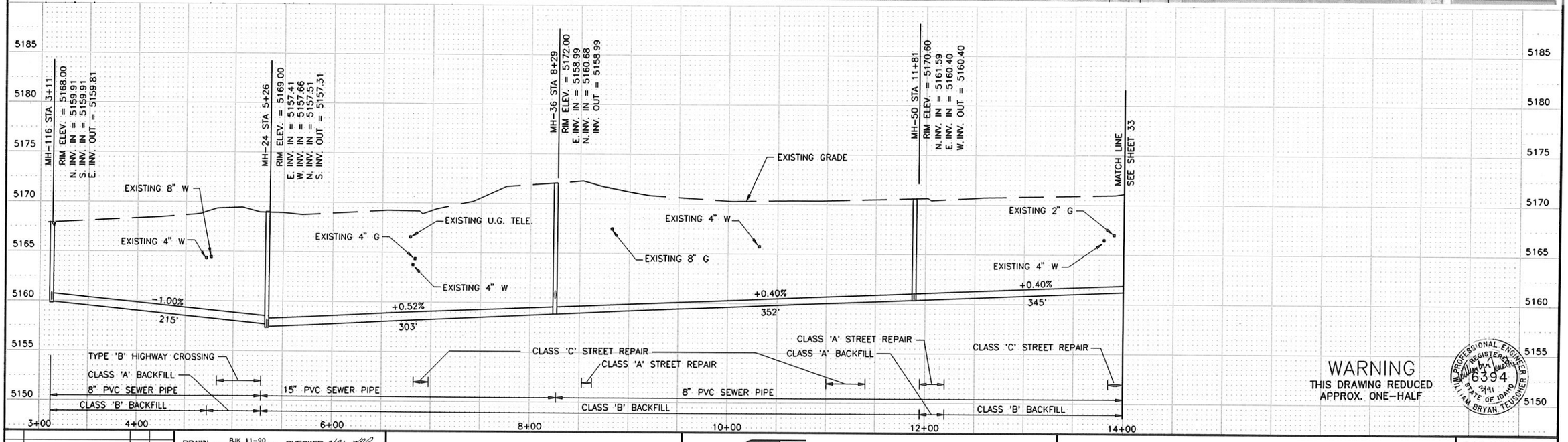

WARNING
THIS DRAWING REDUCED
APPROX. ONE-HALF

PROFESSIONAL ENGINEER
REGISTERED
6394
3/91
STATE OF IDAHO
WILLIAM BRYAN TELLSCHER

NO.	REVISIONS	BY	DATE

DRAWN BJK 11-90 DATE — CHECKED 3/91 DATE
DESIGNED 3/91 DATE — PROJECT ENGINEER
APPROVED 3/91 DATE — PROJECT MANAGER

CITY OF BELLEVUE,
IDAHO

FORSGREN
ASSOCIATES / P.A.

WASTEWATER COLLECTION AND TREATMENT FACILITIES

CHESTNUT STREET

PROJECT NO. 89067

SHEET NO. 32



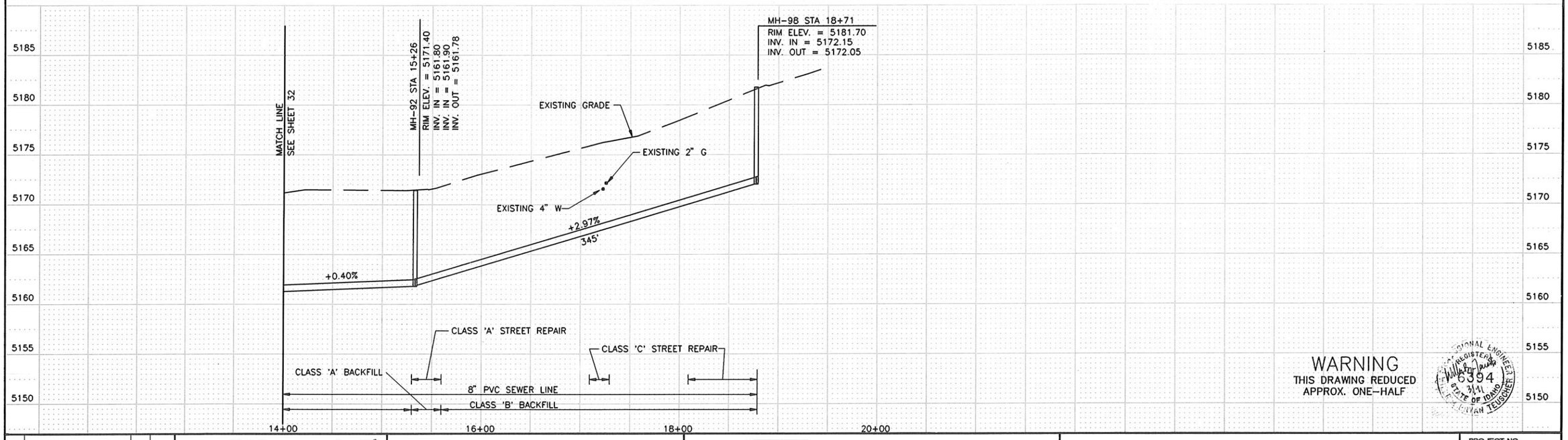

WARNING
THIS DRAWING REDUCED
APPROX. ONE-HALF

REGISTERED PROFESSIONAL ENGINEER
6394
3/91
STATE OF IDAHO
KRISTIAN TELGENHOFF

NO.	REVISIONS	BY	DATE

DRAWN BJK 11-90 DATE CHECKED 3/91 DATE
DESIGNED 3/91 DATE PROJECT ENGINEER
APPROVED 3/91 DATE PROJECT MANAGER

CITY OF BELLEVUE,
IDAHO

FORSGREN ASSOCIATES / P.A.

WASTEWATER COLLECTION AND TREATMENT FACILITIES

CHESTNUT STREET

PROJECT NO. 89067

SHEET NO. 33



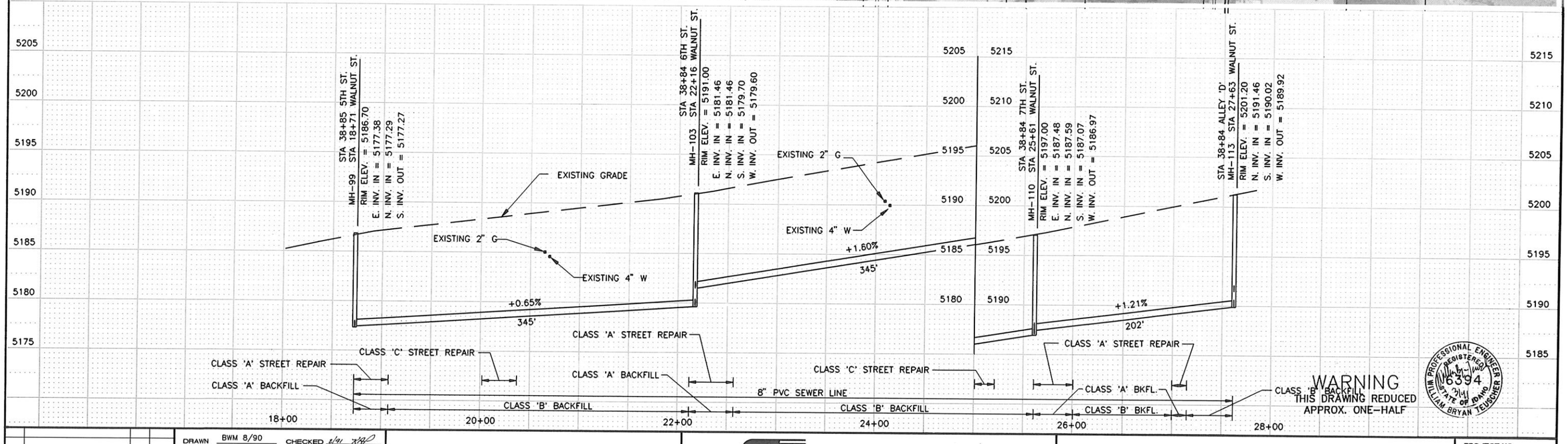

WARNING
THIS DRAWING REDUCED
APPROX. ONE-HALF

WILLIAM PROFESSIONAL ENGINEER REGISTERED 6394 STATE OF IDAHO WILLIAM BRYAN TEUSCHER

NO.	REVISIONS	BY	DATE

DRAWN BWM 8/90 DATE — CHECKED 3/91 DATE

DESIGNED 3/91 DATE — PROJECT ENGINEER

APPROVED 3/91 DATE — PROJECT MANAGER

CITY OF BELLEVUE,
IDAHO

FORSGREN ASSOCIATES / P.A.

WASTEWATER COLLECTION AND TREATMENT FACILITIES

WALNUT STREET

PROJECT NO. 89067

SHEET NO. 34

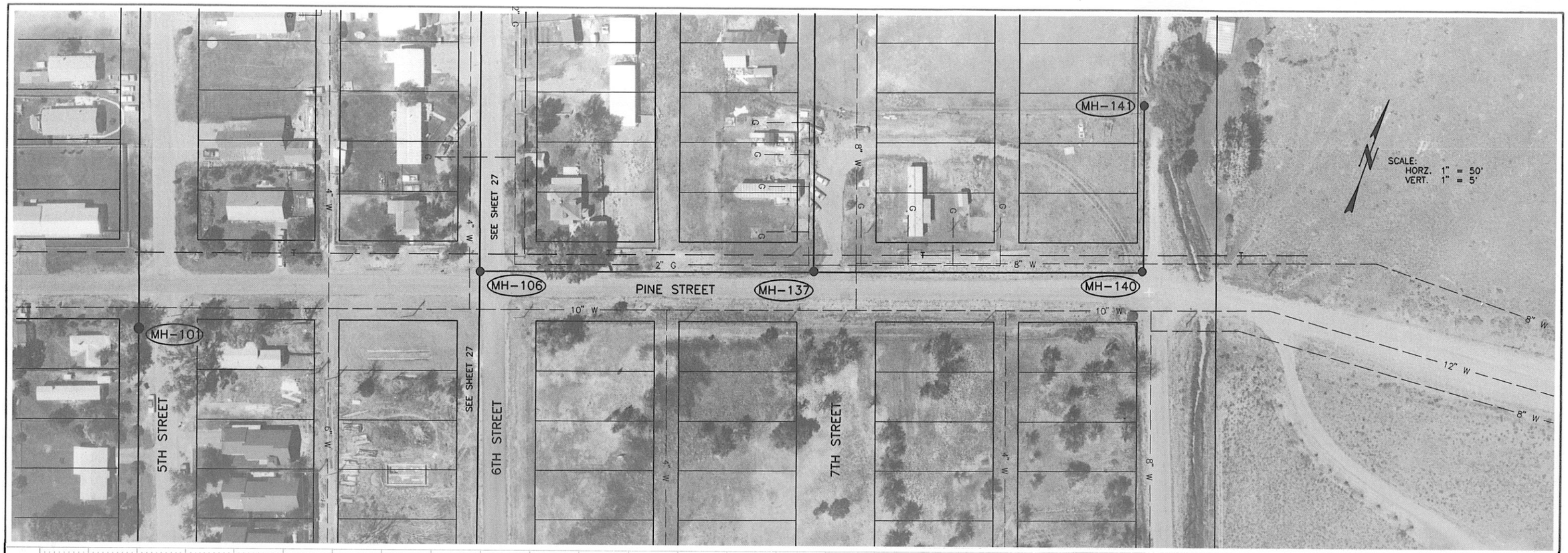

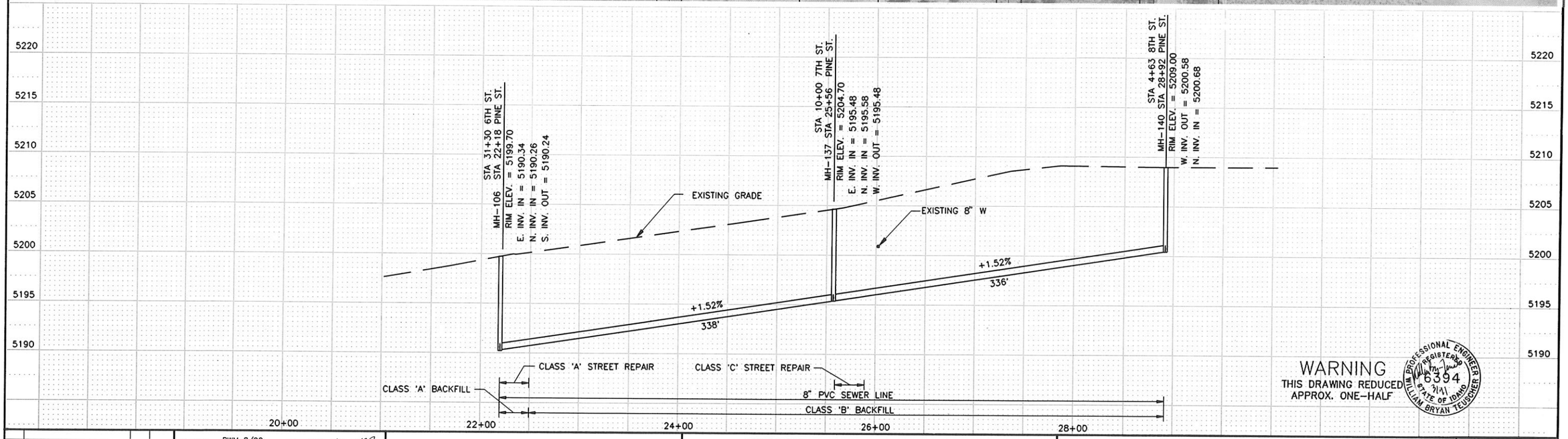

WARNING
THIS DRAWING REDUCED
APPROX. ONE-HALF

PROFESSIONAL ENGINEER
REGISTERED
WILLIAM BRYAN TELSCHER
6394
7/91
STATE OF IDAHO

NO.	REVISIONS	BY	DATE

DRAWN BWM 8/90 DATE — CHECKED 6/91 DATE

DESIGNED 3/91 DATE — PROJECT ENGINEER

APPROVED 3/91 DATE — PROJECT MANAGER

CITY OF BELLEVUE,
IDAHO

FORSGREN
ASSOCIATES / P.A.

WASTEWATER COLLECTION AND TREATMENT FACILITIES

PINE STREET

PROJECT NO. 89067

SHEET NO. 35



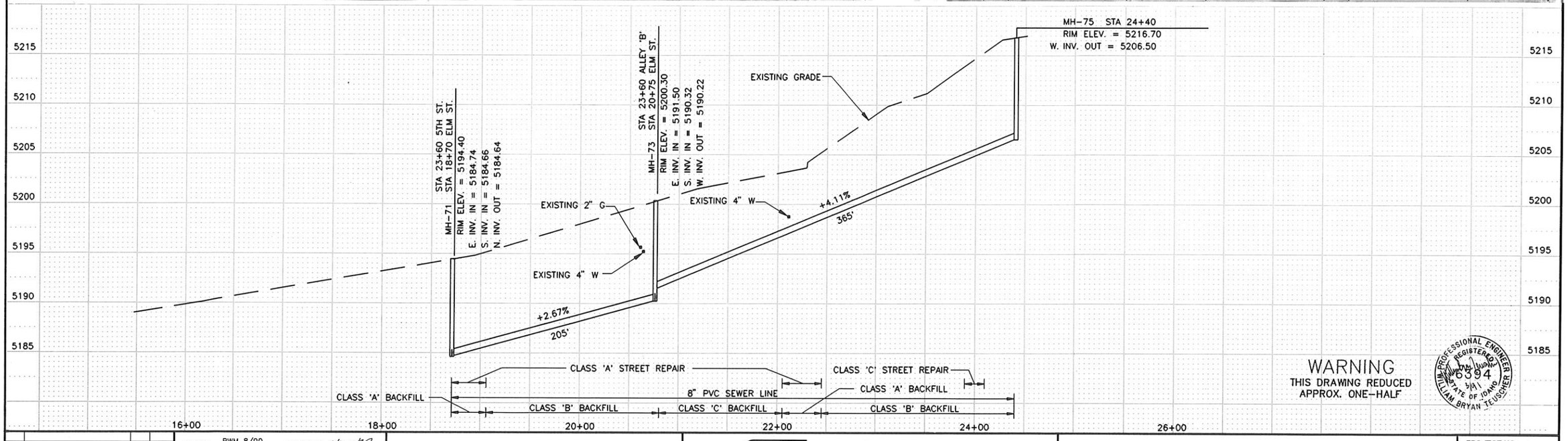

WARNING
THIS DRAWING REDUCED
APPROX. ONE-HALF

PROFESSIONAL ENGINEER REGISTERED 6394 STATE OF IDAHO WILLIAM BRYAN TEUSCHER

NO.	REVISIONS	BY	DATE

DRAWN BWM 8/90 DATE — CHECKED DATE
DESIGNED 3/91 DATE — PROJECT ENGINEER
APPROVED 3/91 DATE — PROJECT MANAGER

CITY OF BELLEVUE,
IDAHO

FORSGREN ASSOCIATES / P.A.

WASTEWATER COLLECTION AND TREATMENT FACILITIES

ELM STREET

PROJECT NO. 89067

SHEET NO. 36



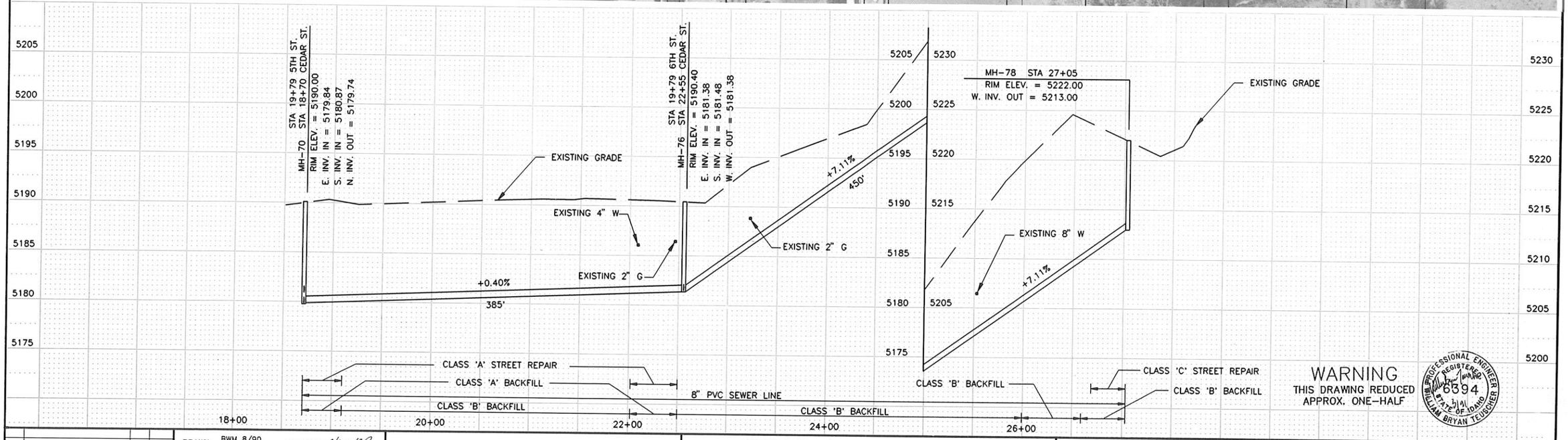

WARNING
THIS DRAWING REDUCED
APPROX. ONE-HALF

PROFESSIONAL ENGINEER REGISTERED 6394 STATE OF IDAHO WILLIAM BRYAN TEUSCHER

NO.	REVISIONS	BY	DATE

DRAWN BWM 8/90 DATE — CHECKED 3/91 DATE

DESIGNED 3/91 DATE — PROJECT ENGINEER

APPROVED 3/91 DATE — PROJECT MANAGER

CITY OF BELLEVUE,
IDAHO

FORSGREN ASSOCIATES / P.A.

WASTEWATER COLLECTION AND TREATMENT FACILITIES

CEDAR STREET

PROJECT NO. 89067

SHEET NO. 37



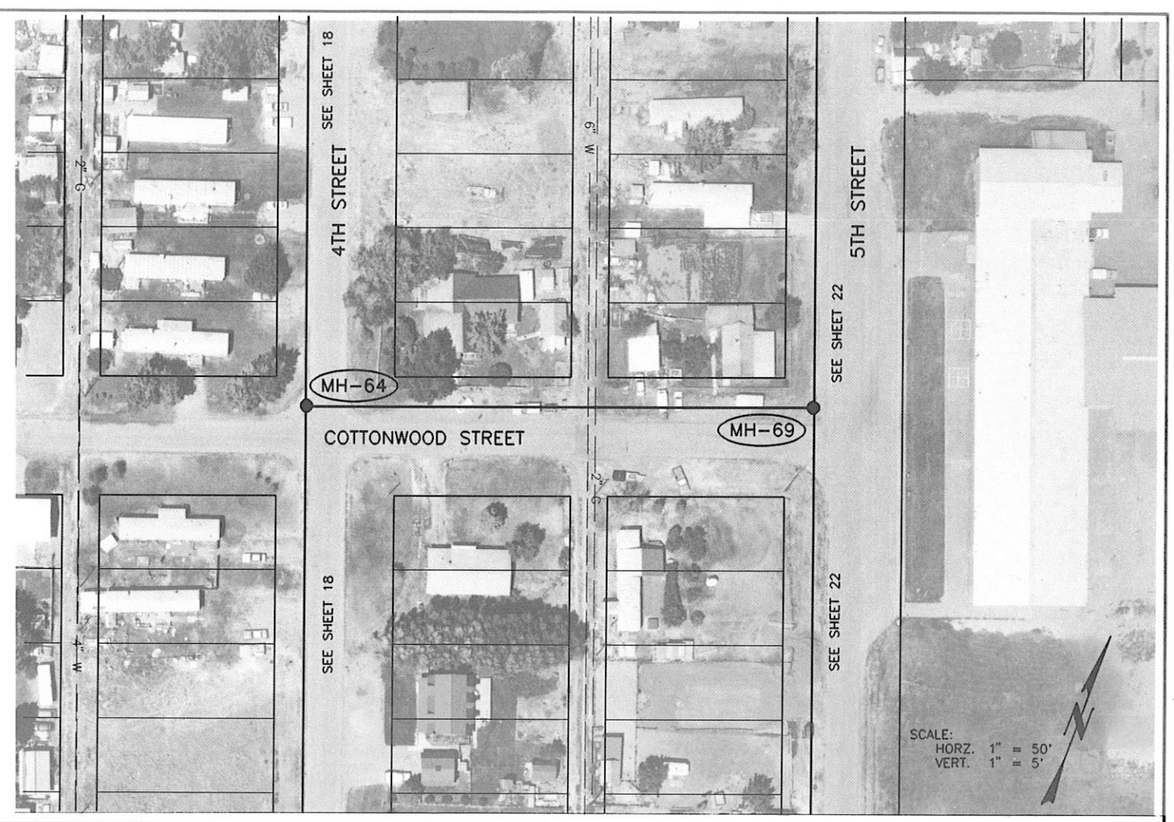

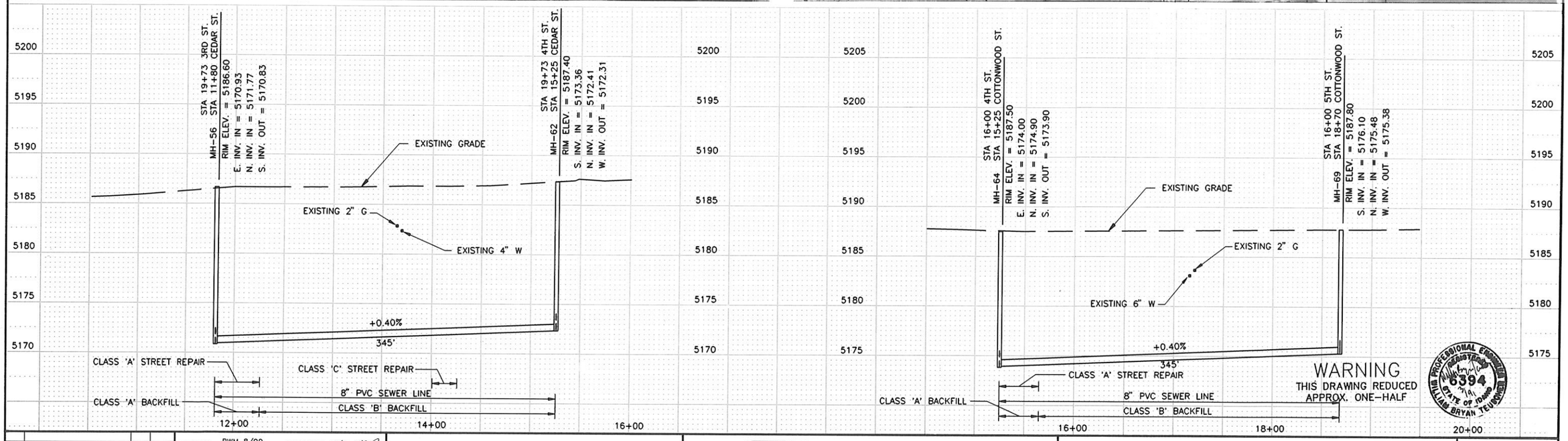

WARNING
THIS DRAWING REDUCED
APPROX. ONE-HALF

PROFESSIONAL ENGINEER
REGISTERED
5394
STATE OF IDAHO
WILLIAM BRYAN TEUSCHER

NO.	REVISIONS	BY	DATE

DRAWN BWM 8/90 DATE — CHECKED 3/91 DATE
DESIGNED 3/91 DATE — PROJECT ENGINEER
APPROVED 3/91 DATE — PROJECT MANAGER

CITY OF BELLEVUE,
IDAHO

FORSGREN
ASSOCIATES / P.A.

WASTEWATER COLLECTION AND TREATMENT FACILITIES

COTTONWOOD STREET & CEDAR STREET

PROJECT NO. 89067

SHEET NO. 38

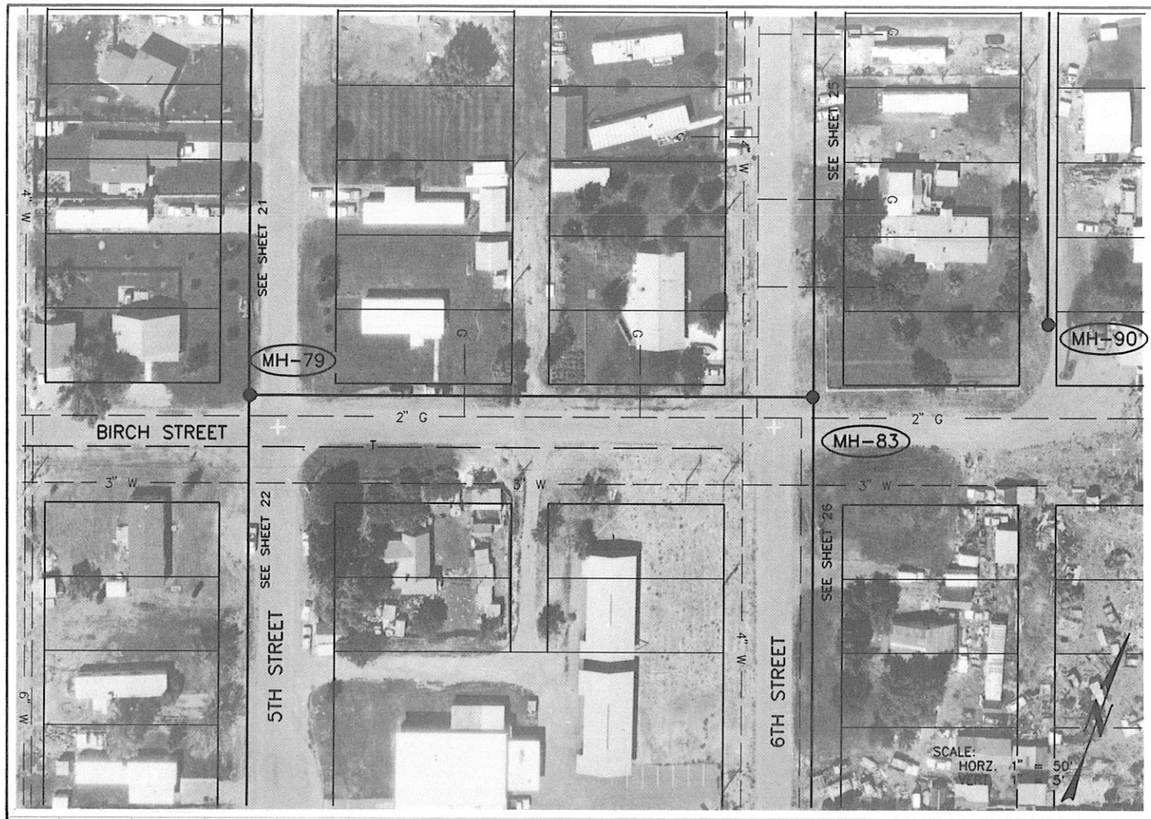

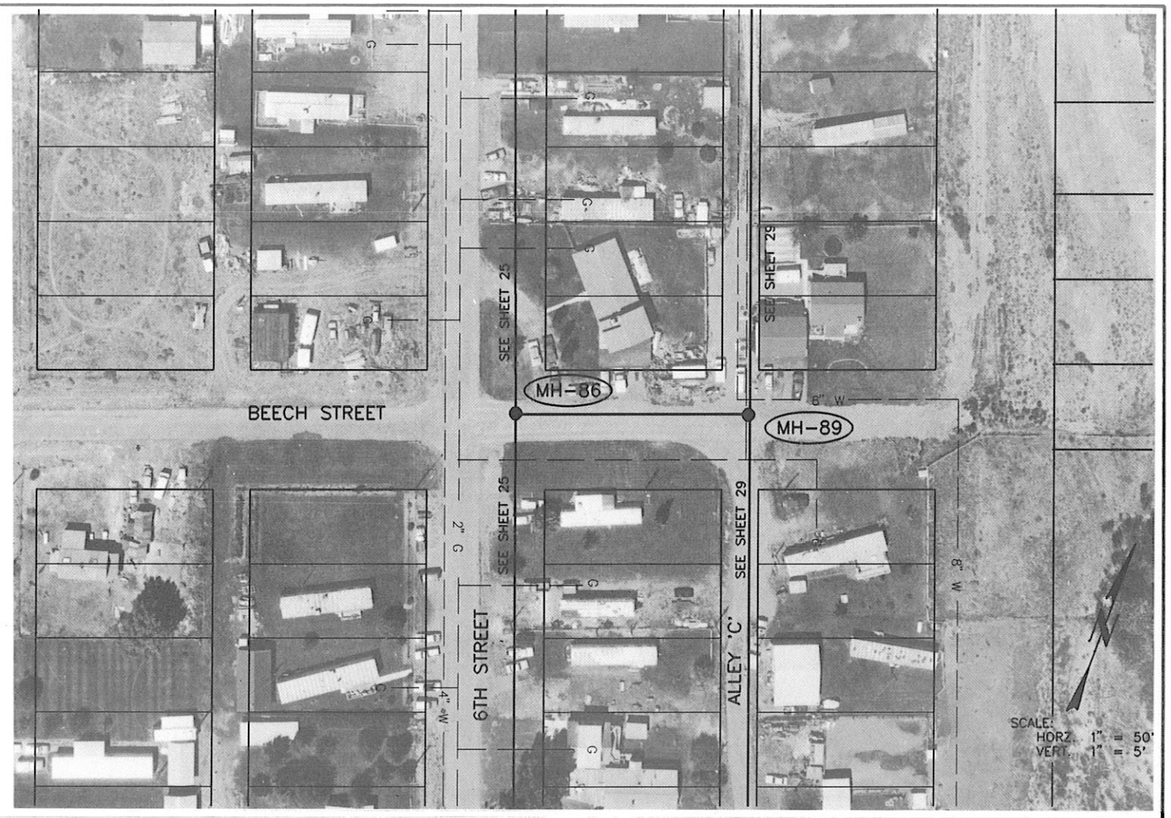

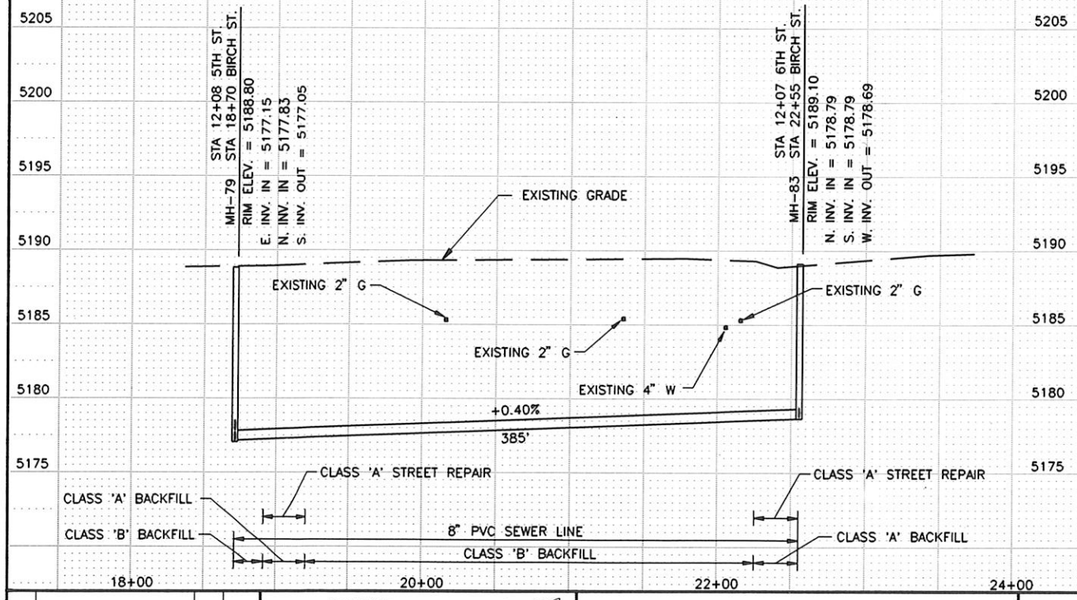

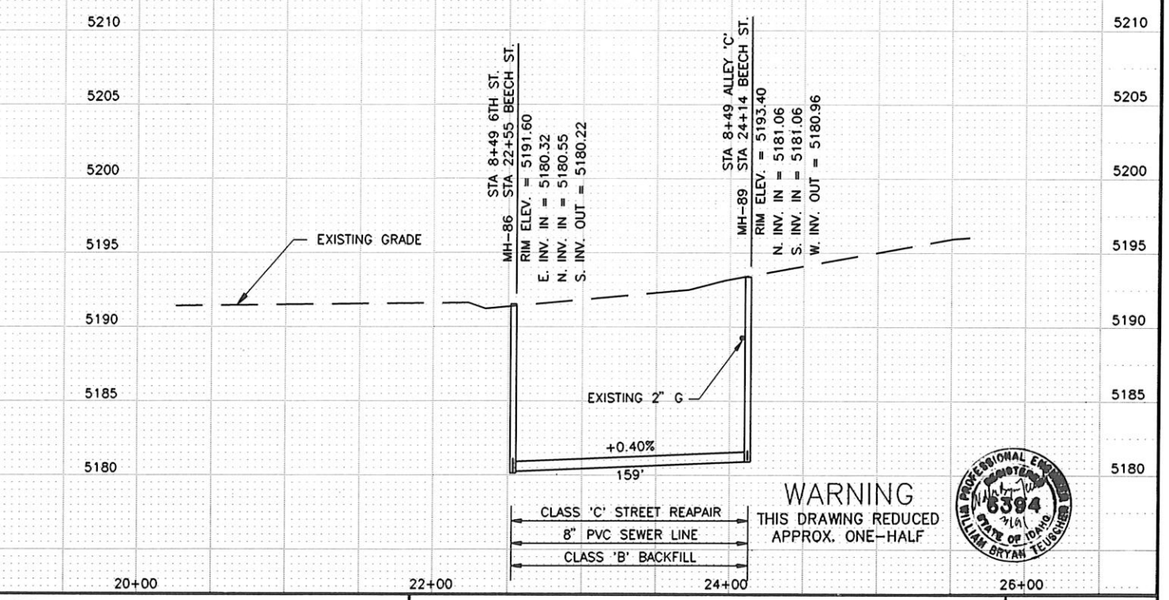

WARNING
THIS DRAWING REDUCED
APPROX. ONE-HALF

PROFESSIONAL ENGINEER
REGISTERED
6394
7/91
STATE OF IDAHO
WILLIAM BRYAN TEUSCHER

NO.	REVISIONS	BY	DATE

DRAWN BWM 8/90 DATE — CHECKED 2/91 DATE
DESIGNED 3/91 DATE — PROJECT ENGINEER
APPROVED 3/91 DATE — PROJECT MANAGER

CITY OF BELLEVUE,
IDAHO

FORSGREN
ASSOCIATES / P.A.

WASTEWATER COLLECTION AND TREATMENT FACILITIES

BIRCH STREET & BEECH STREET

PROJECT NO. 89067

SHEET NO. 39



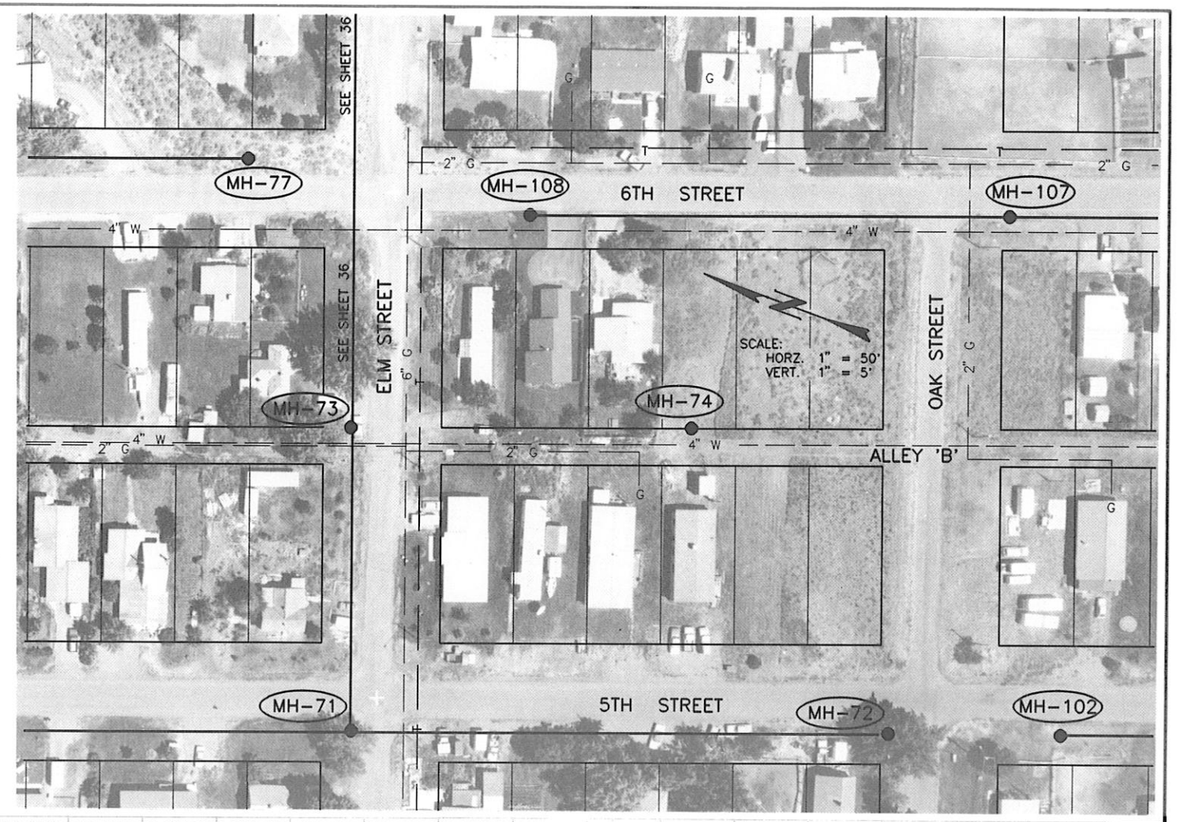

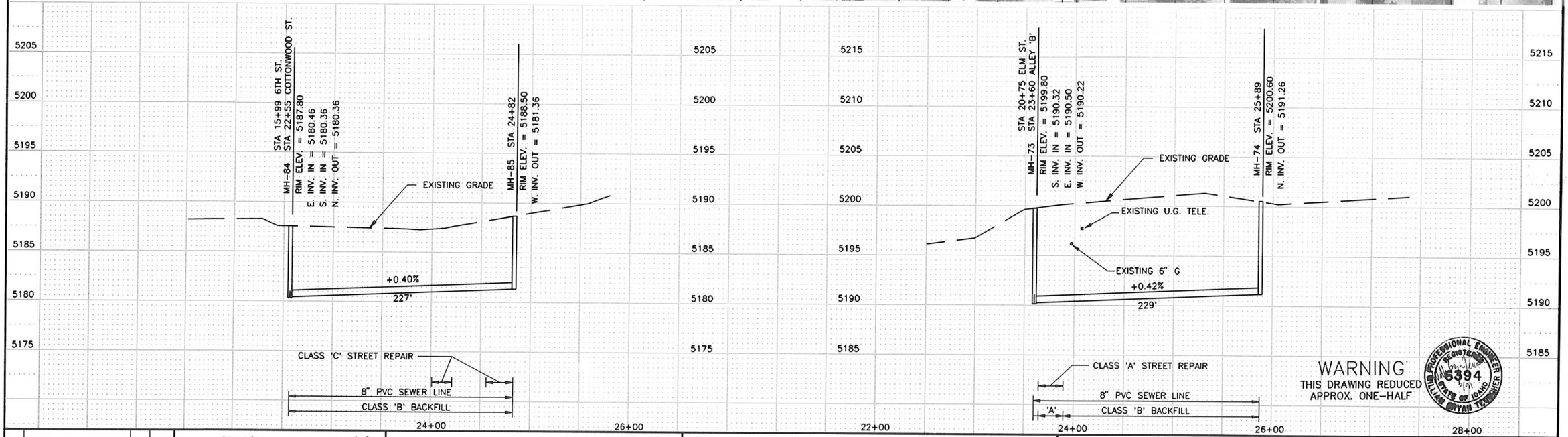

WARNING
THIS DRAWING REDUCED
APPROX. ONE-HALF

REGISTERED PROFESSIONAL ENGINEER
6394
STATE OF IDAHO
WILLIAM BRYAN THOMPSON

NO.	REVISIONS	BY	DATE

DRAWN BWM 8/90 DATE — CHECKED 3/91 DATE
DESIGNED 3/91 DATE — PROJECT ENGINEER
APPROVED 3/91 DATE — PROJECT MANAGER

CITY OF BELLEVUE,
IDAHO

FORSGREN ASSOCIATES / P.A.

WASTEWATER COLLECTION AND TREATMENT FACILITIES

COTTONWOOD STREET & ALLEY B

PROJECT NO. 89067

SHEET NO. 40

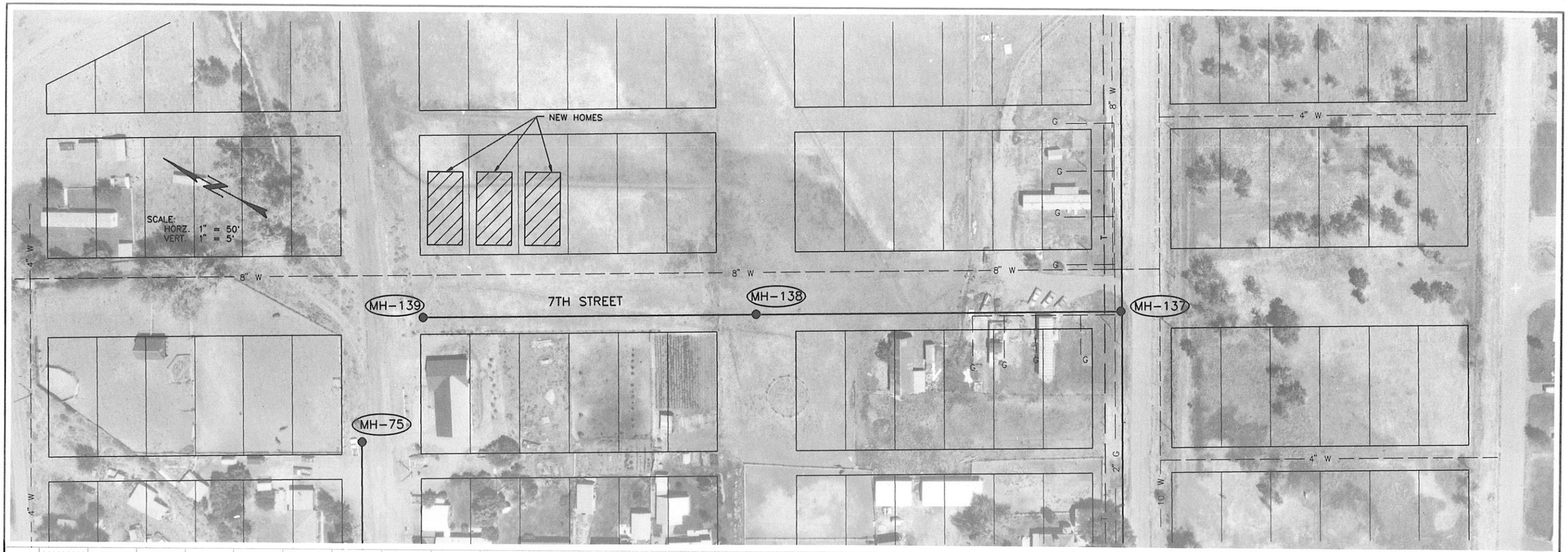

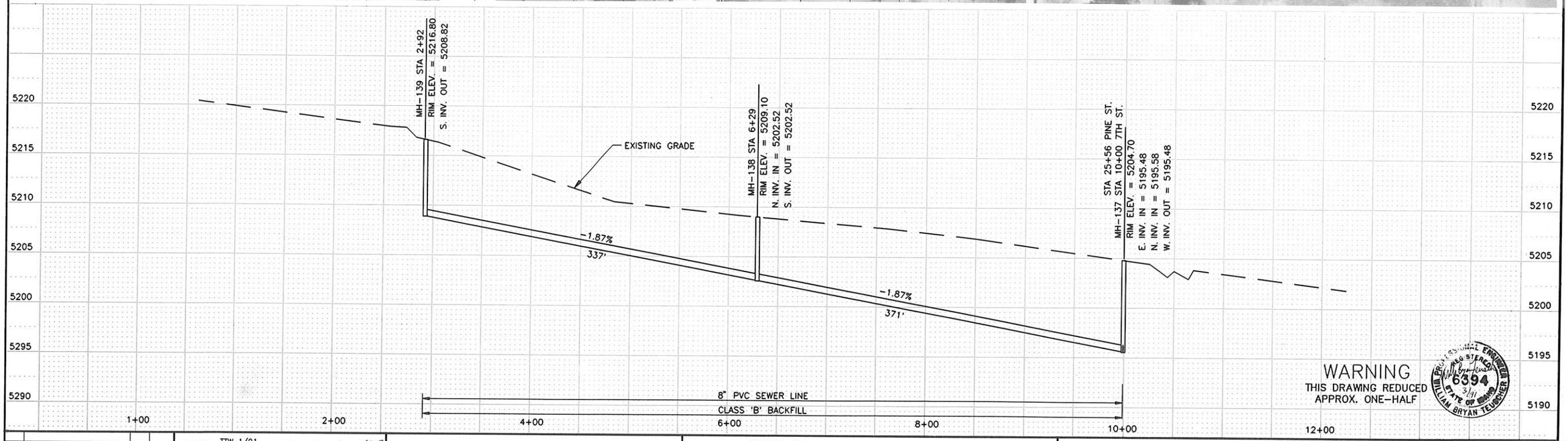

WARNING
THIS DRAWING REDUCED
APPROX. ONE-HALF

PROFESSIONAL ENGINEER
CRAIG STEPHEN LEWIS
6394
3/91
STATE OF IDAHO
WILLIAM BRYAN TEUSCHER

NO.	REVISIONS	BY	DATE

DRAWN TTW 1/91 DATE — CHECKED 3/91 DATE

DESIGNED 3/91 DATE — PROJECT ENGINEER

APPROVED 3/91 DATE — PROJECT MANAGER

CITY OF BELLEVUE,
IDAHO

FORSGREN
ASSOCIATES / P.A.

WASTEWATER COLLECTION AND TREATMENT FACILITIES

7TH STREET

PROJECT NO. 89067

SHEET NO. 41

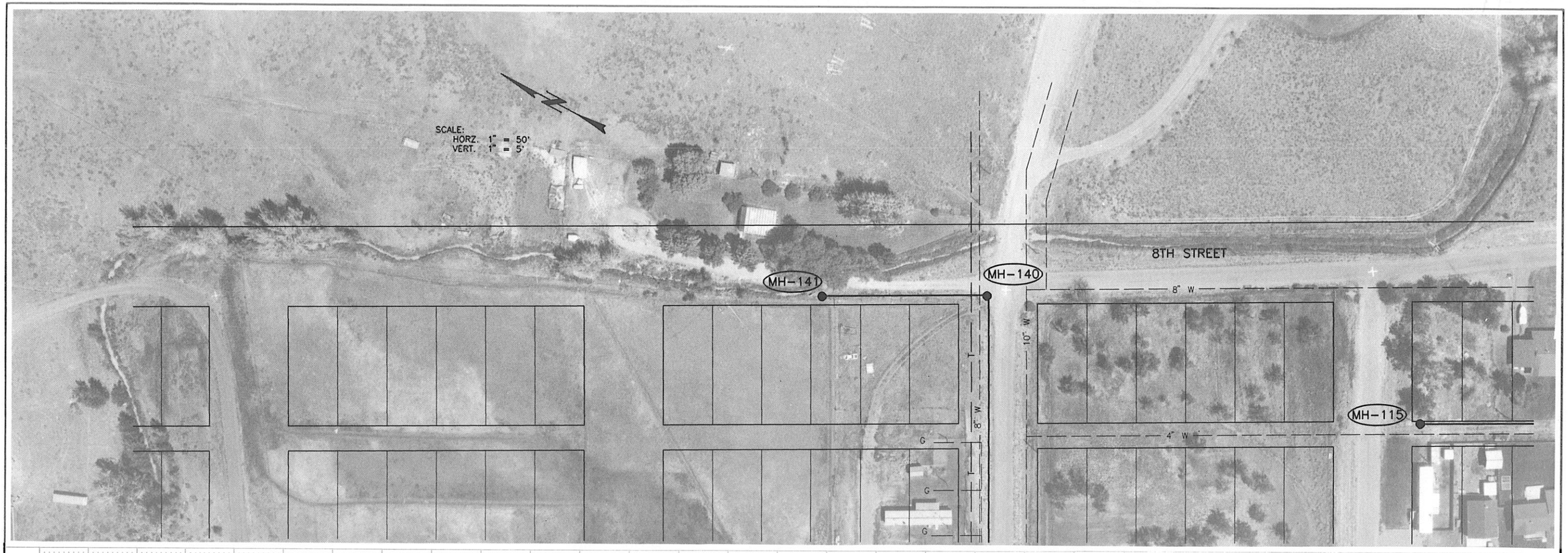

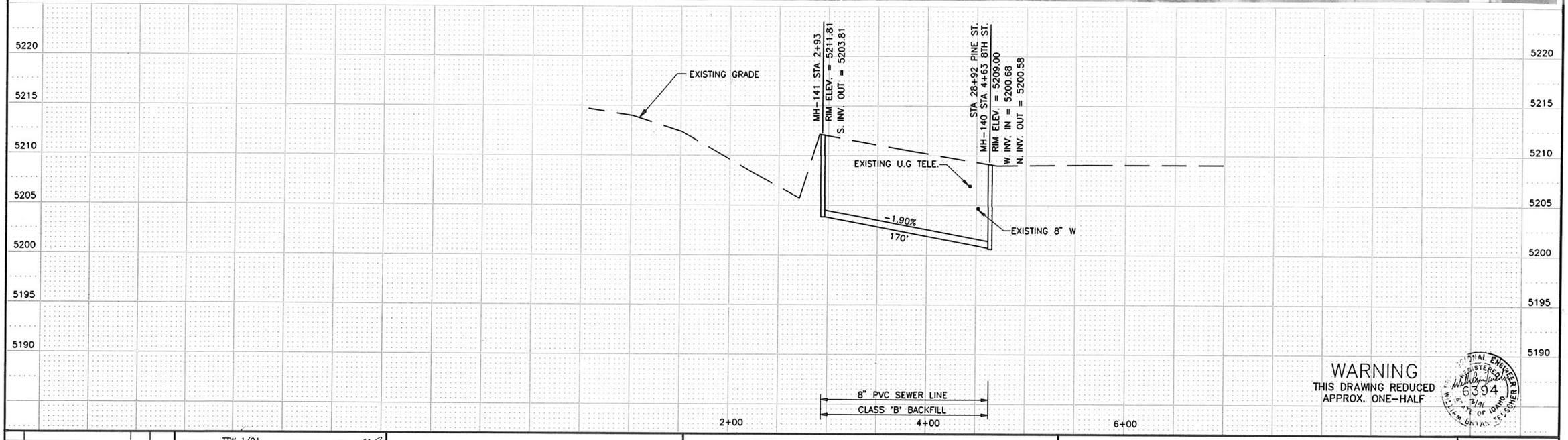

WARNING
THIS DRAWING REDUCED
APPROX. ONE-HALF

REGISTERED PROFESSIONAL ENGINEER
6394
STATE OF IDAHO
WILLIAM BRYAN TSCHIRHART

NO.	REVISIONS	BY	DATE

DRAWN TTW 1/91 DATE — CHECKED 3/91 DATE
DESIGNED 3/91 DATE — PROJECT ENGINEER
APPROVED 3/91 DATE — PROJECT MANAGER

CITY OF BELLEVUE,
IDAHO

FORSGREN ASSOCIATES / P.A.

WASTEWATER COLLECTION AND TREATMENT FACILITIES

8TH STREET

PROJECT NO. 89067

SHEET NO. 42

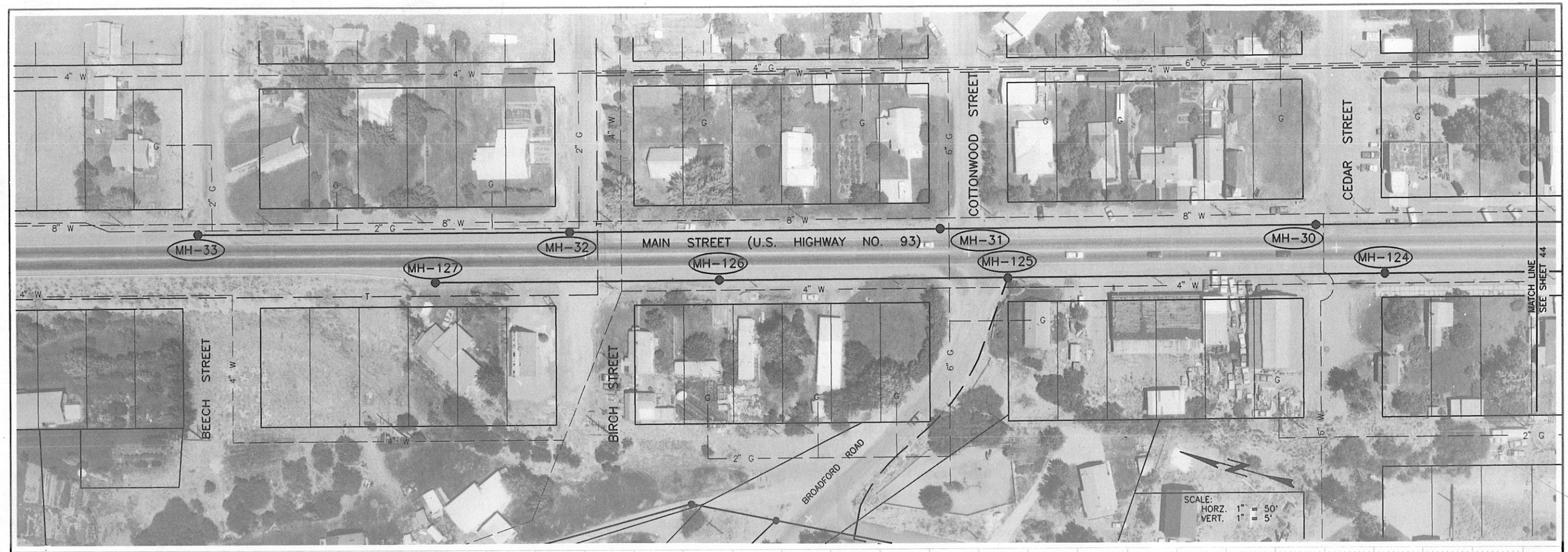

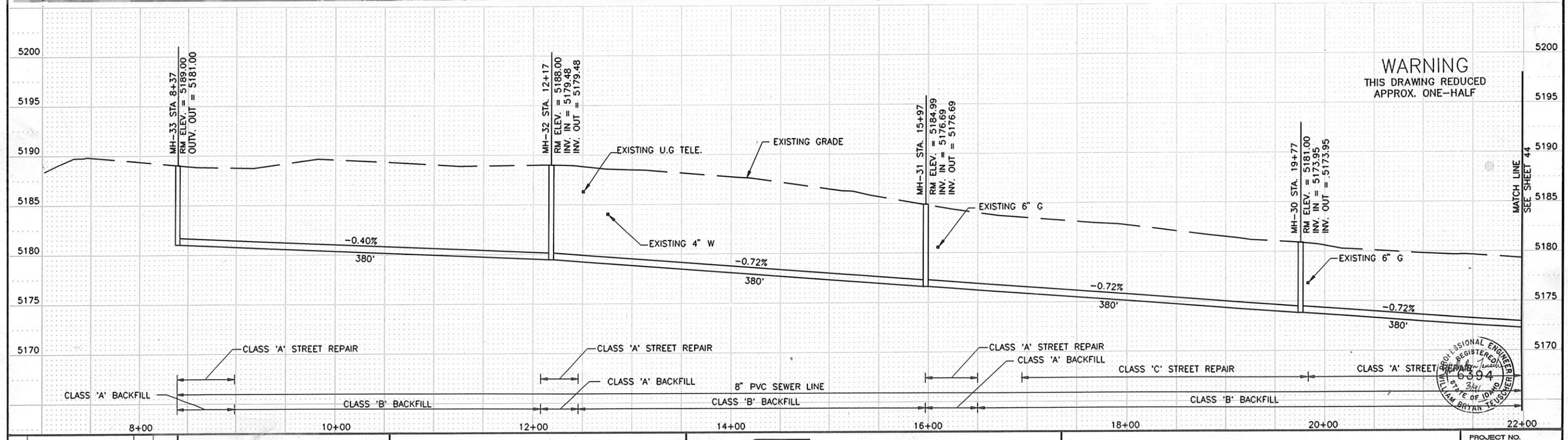

NO.	REVISIONS	BY	DATE

DRAWN BJK 3-91 DATE — CHECKED 3/91 DATE

DESIGNED 3/91 DATE — PROJECT ENGINEER

APPROVED 3-91 DATE — PROJECT MANAGER

CITY OF BELLEVUE,
IDAHO

FORSGREN ASSOCIATES / P.A.

WASTEWATER COLLECTION AND TREATMENT FACILITIES

MAIN STREET (EAST SIDE)

PROJECT NO. 89067

SHEET NO. 43

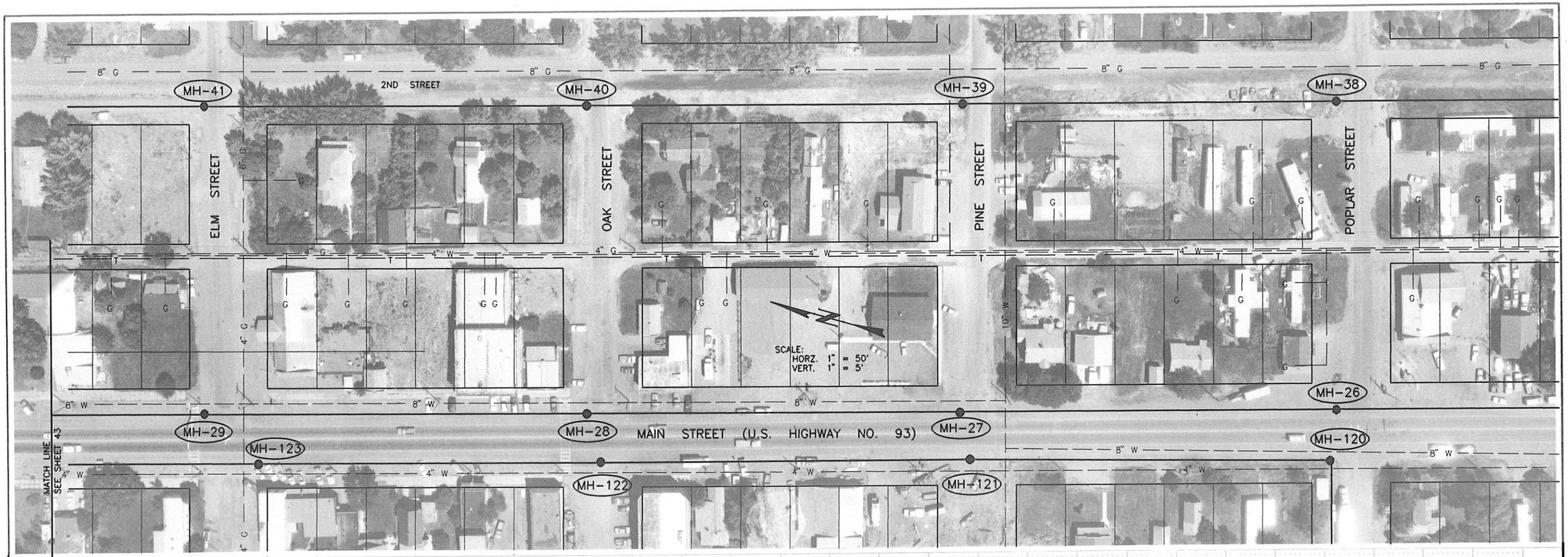

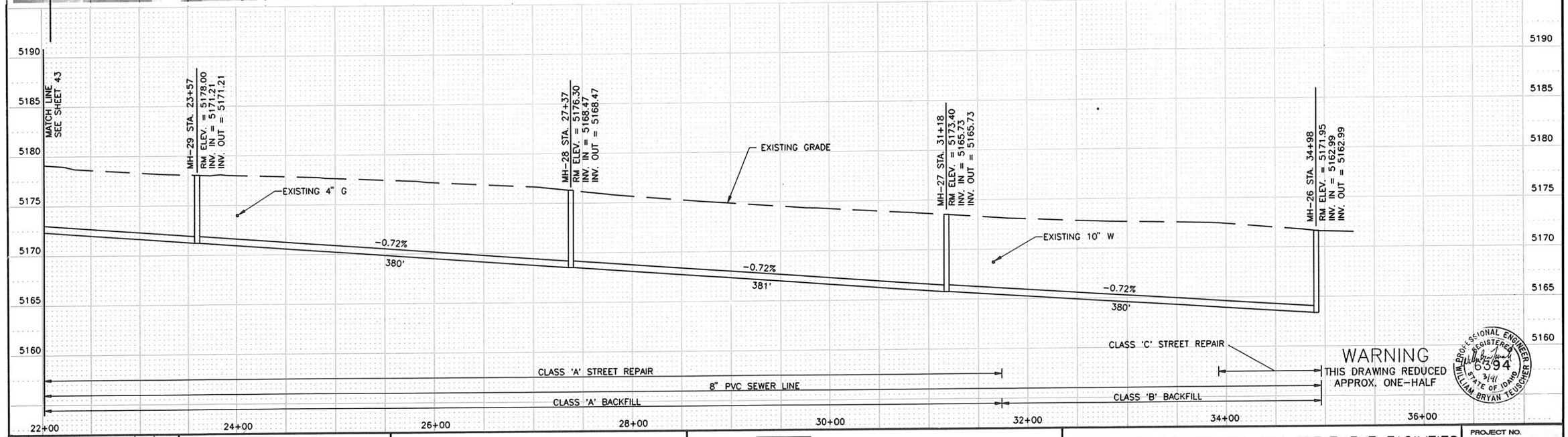

WARNING
THIS DRAWING REDUCED
APPROX. ONE-HALF

PROFESSIONAL ENGINEER
REGISTERED
6394
STATE OF IDAHO
WILLIAM BRYAN TEUSCHER

NO.	REVISIONS	BY	DATE

DRAWN BJK 11-90 DATE CHECKED DATE

DESIGNED 3/91 DATE PROJECT ENGINEER

APPROVED 3/91 DATE PROJECT MANAGER

CITY OF BELLEVUE,
IDAHO

FORSGREN
ASSOCIATES / P.A.

WASTEWATER COLLECTION AND TREATMENT FACILITIES

MAIN STREET (EAST SIDE)

PROJECT NO. 89067

SHEET NO. 44

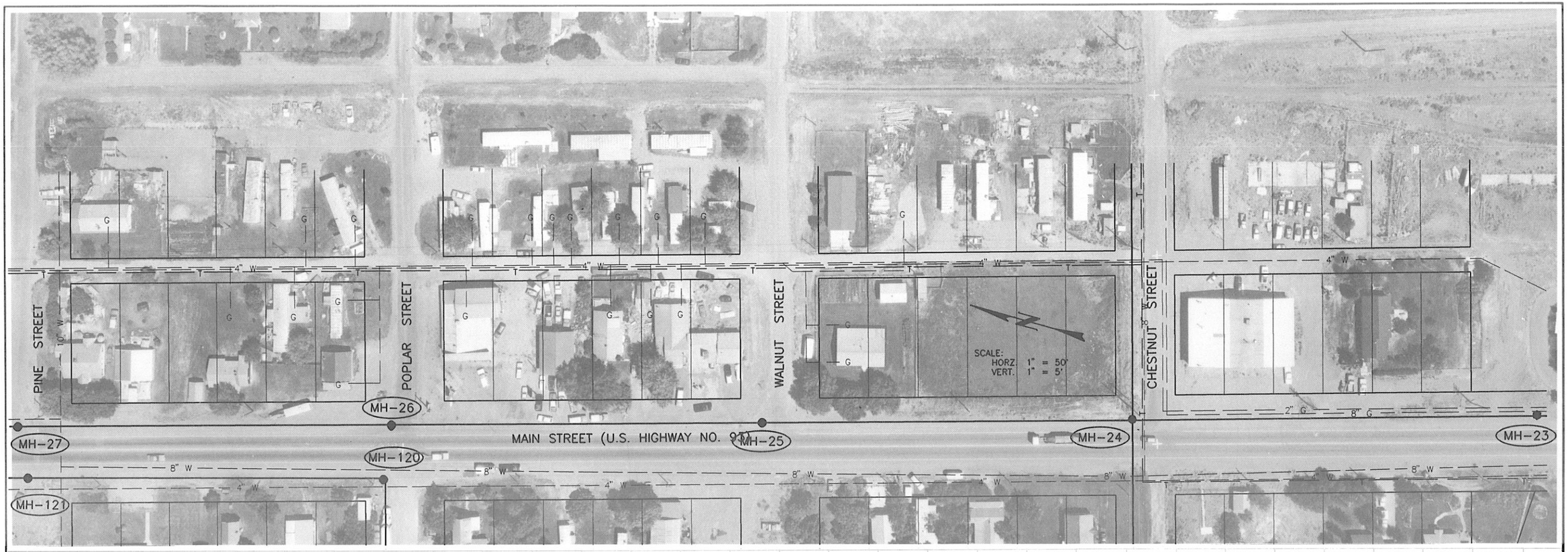

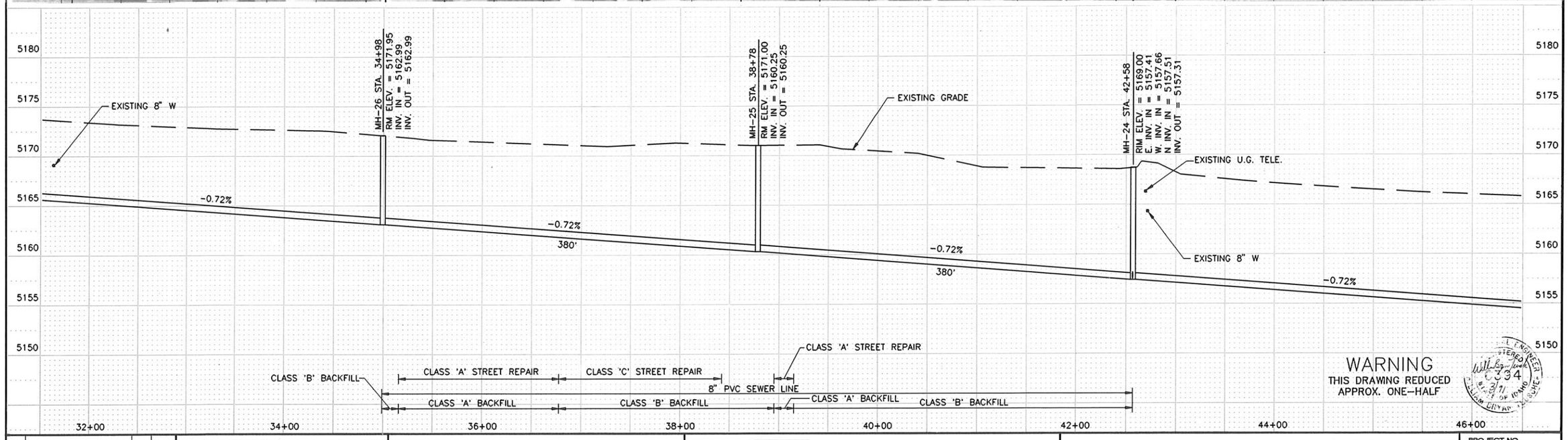

WARNING
THIS DRAWING REDUCED
APPROX. ONE-HALF

NO.	REVISIONS	BY	DATE

DRAWN BJK 11-90 DATE CHECKED 3/91 DATE
DESIGNED 3/91 DATE PROJECT ENGINEER
APPROVED 3/91 DATE PROJECT MANAGER

CITY OF BELLEVUE,
IDAHO

FORSGREN ASSOCIATES / P.A.

WASTEWATER COLLECTION AND TREATMENT FACILITIES

MAIN STREET (EAST SIDE)

PROJECT NO. 89067

SHEET NO. 45

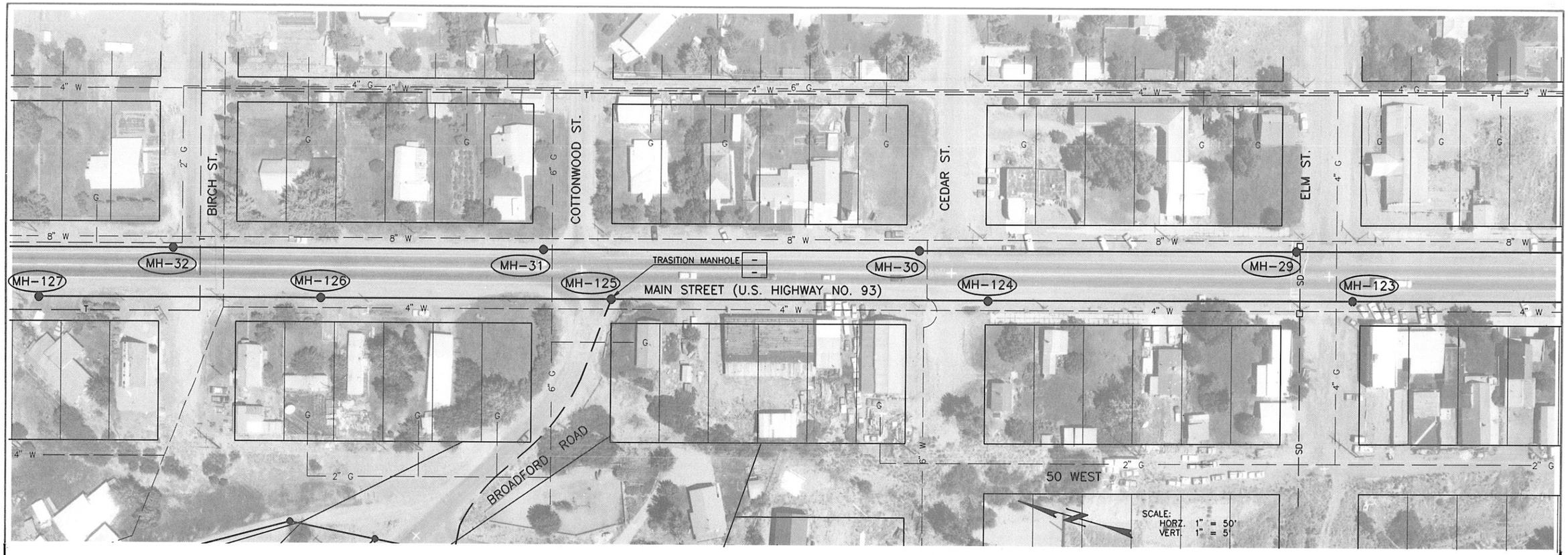

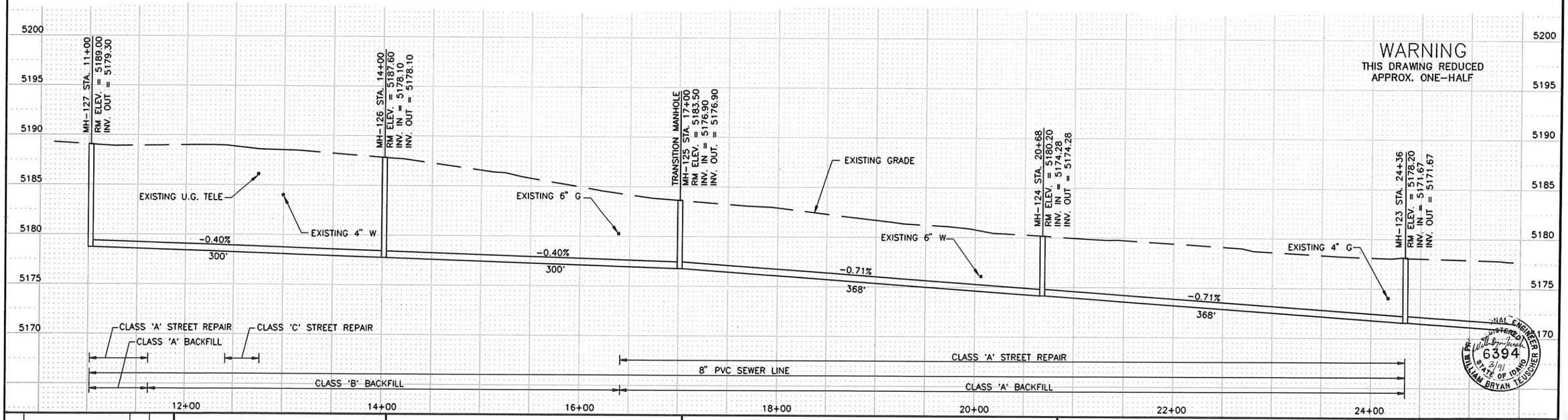

WARNING
THIS DRAWING REDUCED
APPROX. ONE-HALF

REGISTERED PROFESSIONAL ENGINEER
6394
3/91
STATE OF IDAHO
WILLIAM BRYAN TEUSCHER

NO.	REVISIONS	BY	DATE

DRAWN BJK 11-90 DATE CHECKED 3/91 DATE
DESIGNED 3/91 DATE PROJECT ENGINEER
APPROVED 3/91 DATE PROJECT MANAGER

CITY OF BELLEVUE,
IDAHO

FORSGREN
ASSOCIATES / P.A.

WASTEWATER COLLECTION AND TREATMENT FACILITIES
MAIN STREET (WEST SIDE)

PROJECT NO. 89067
SHEET NO. 46

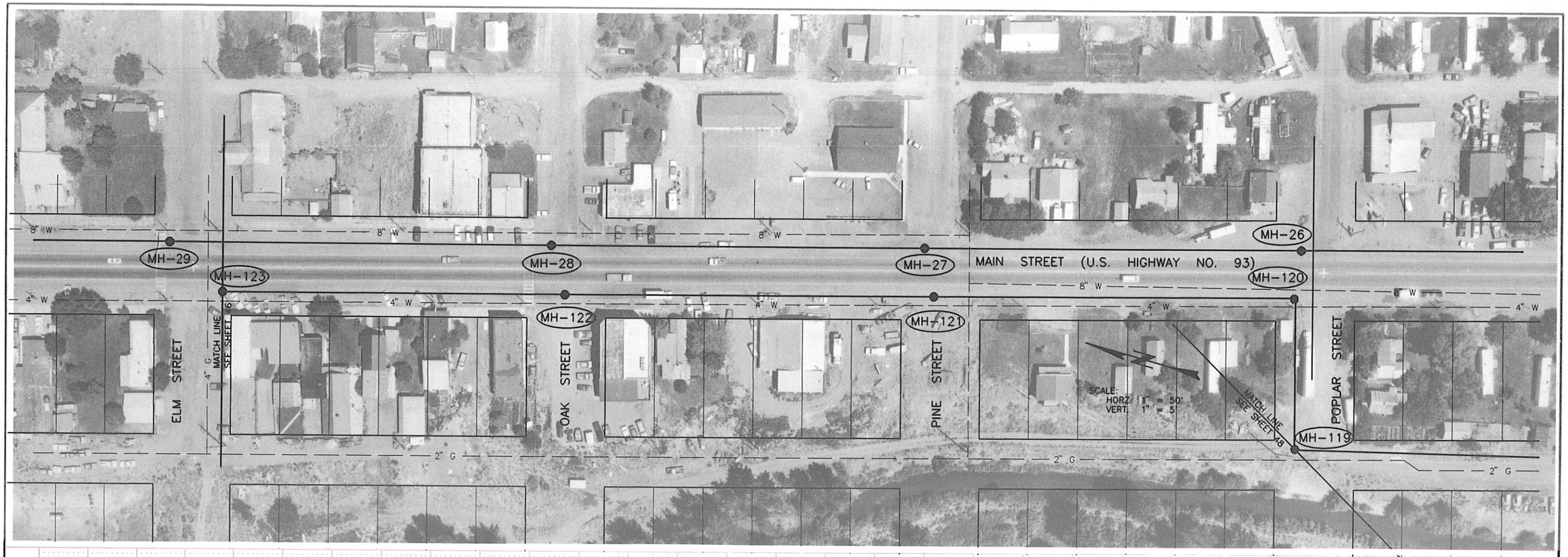

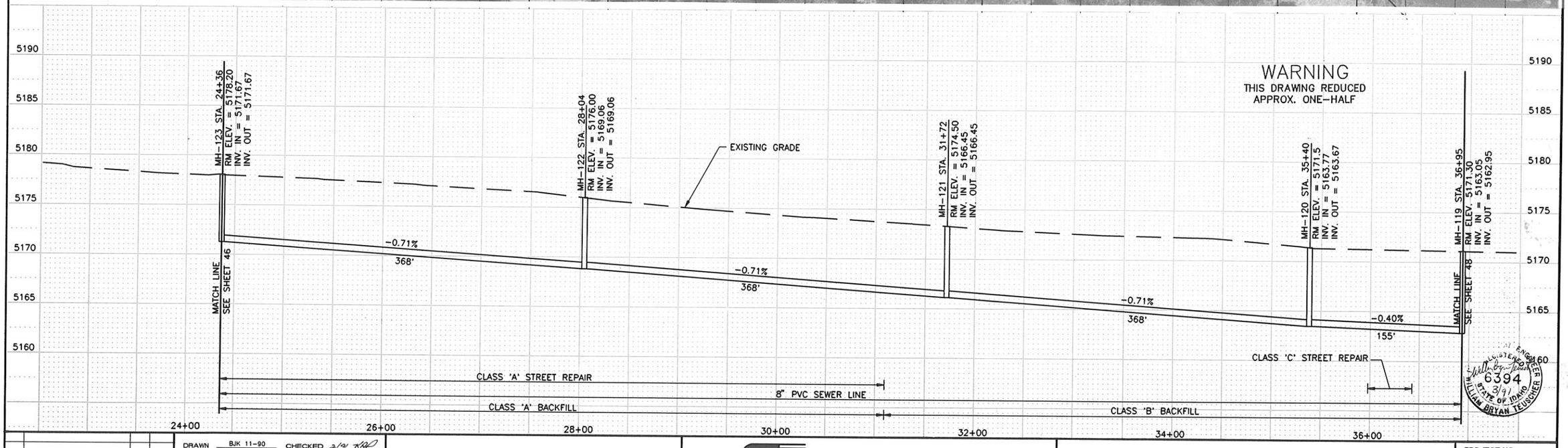

WARNING
THIS DRAWING REDUCED
APPROX. ONE-HALF

REGISTERED PROFESSIONAL ENGINEER
6394
3/91
STATE OF IDAHO
WILLIAM BRYAN TEUSCHER

NO.	REVISIONS	BY	DATE

DRAWN BJK 11-90 DATE — CHECKED 3/91 DATE
DESIGNED 3/91 DATE — PROJECT ENGINEER
APPROVED 3/91 DATE — PROJECT MANAGER

CITY OF BELLEVUE,
IDAHO

FORSGREN ASSOCIATES / P.A.

WASTEWATER COLLECTION AND TREATMENT FACILITIES

MAIN STREET (WEST SIDE)

PROJECT NO. 89067

SHEET NO. 47

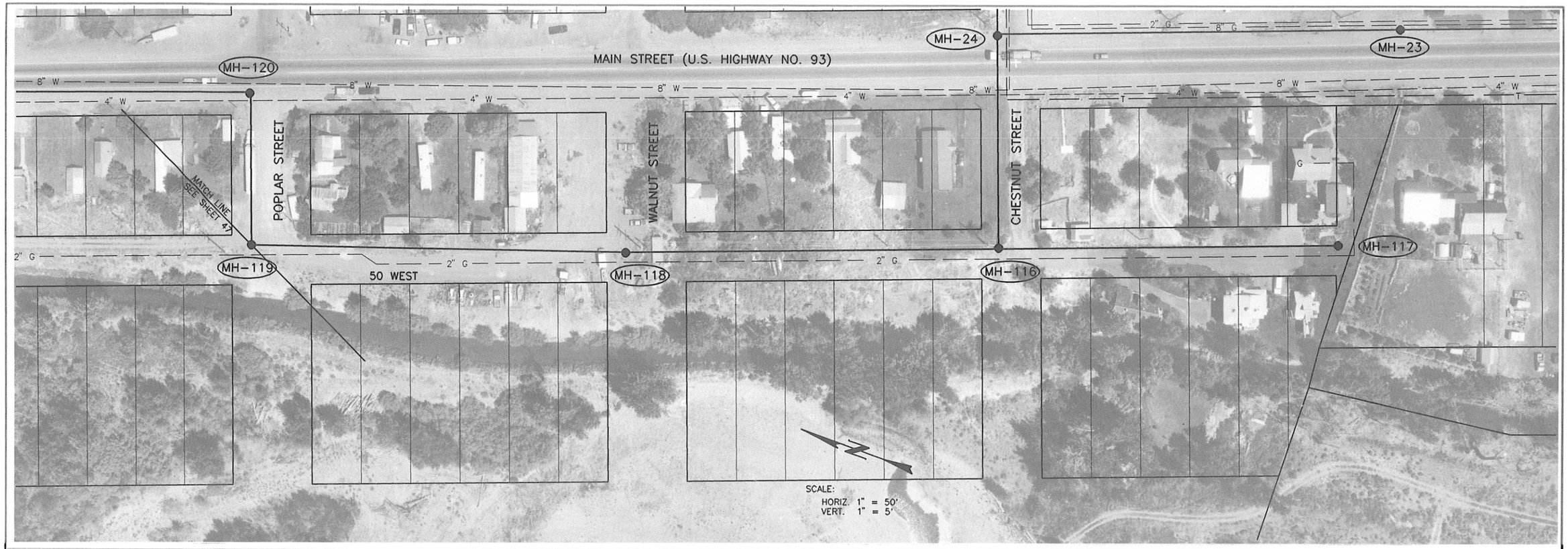

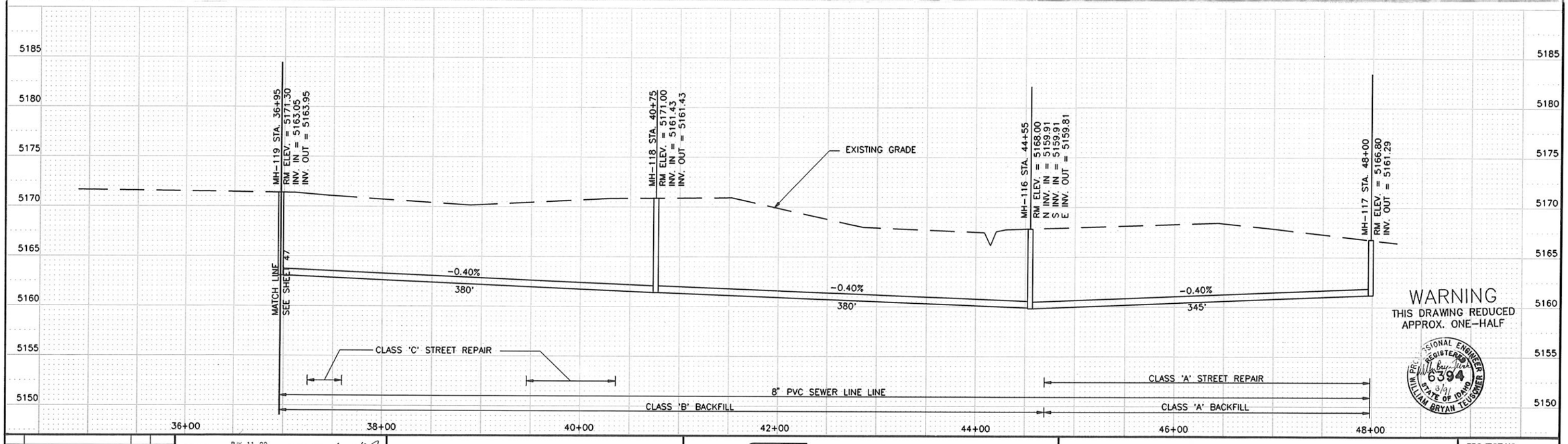

WARNING
THIS DRAWING REDUCED
APPROX. ONE-HALF

PROFESSIONAL ENGINEER REGISTERED 6394 STATE OF IDAHO WILLIAM BRYAN TEUSCHER 3/91

NO.	REVISIONS	BY	DATE

DRAWN BJK 11-90 DATE — CHECKED 3/91 DATE

DESIGNED 3/91 DATE — PROJECT ENGINEER

APPROVED 3/91 DATE — PROJECT MANAGER

CITY OF BELLEVUE,
IDAHO

FORSGREN ASSOCIATES / P.A.

WASTEWATER COLLECTION AND TREATMENT FACILITIES

50 WEST STREET

PROJECT NO. 89067

SHEET NO. 48

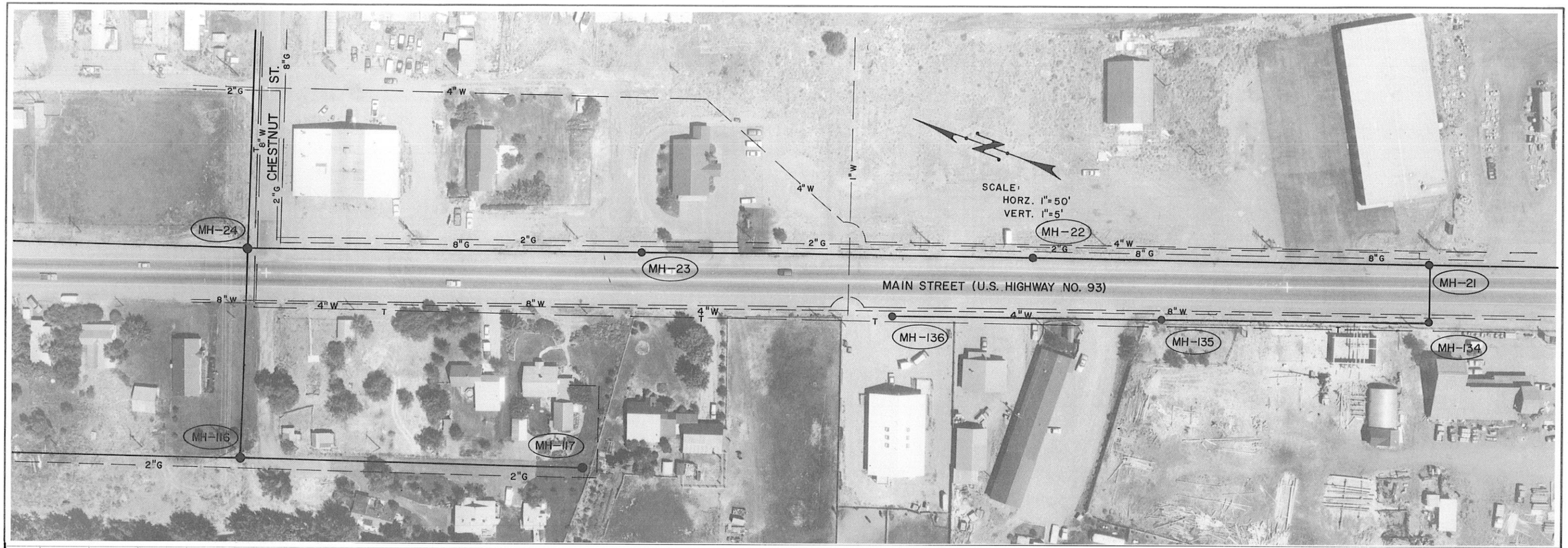

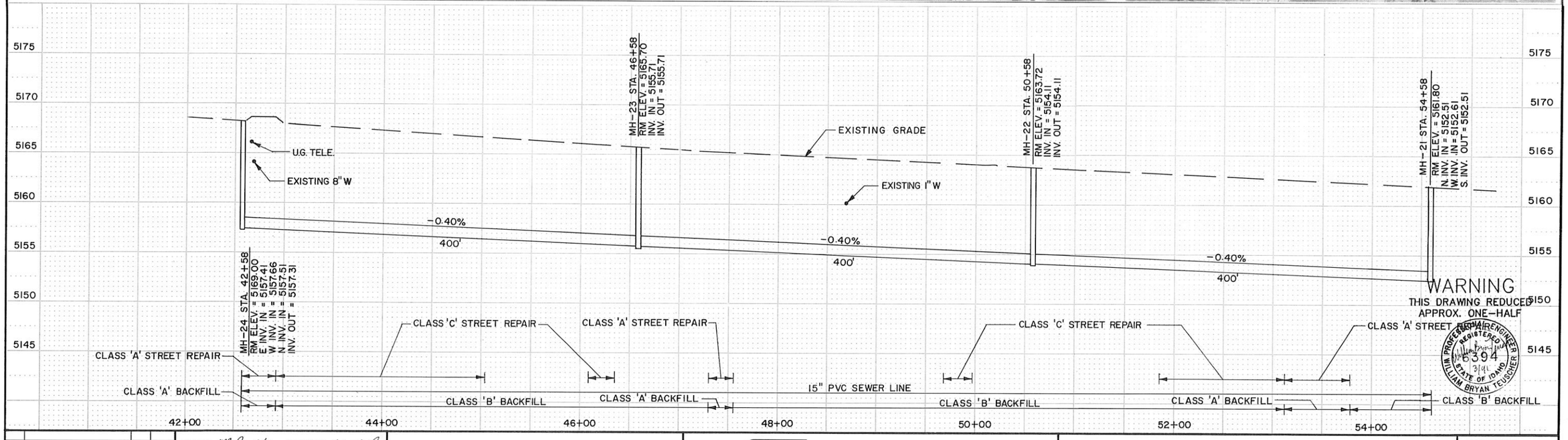

WARNING
THIS DRAWING REDUCED
APPROX. ONE-HALF

TIM PROGER WILLIAM BRYAN TEUSCHER REGISTERED PROFESSIONAL ENGINEER 6394 STATE OF IDAHO 3/91

NO.	REVISIONS	BY	DATE

DRAWN M.D. 2/91 DATE CHECKED 2/91 DATE

DESIGNED 3/91 DATE PROJECT ENGINEER

APPROVED 3/91 DATE PROJECT MANAGER

CITY OF BELLEVUE,
IDAHO

FORSGREN ASSOCIATES / P.A.

WASTEWATER COLLECTION AND TREATMENT FACILITIES

HIGHWAY 93 (EAST SIDE)

PROJECT NO. 89067

SHEET NO. 49

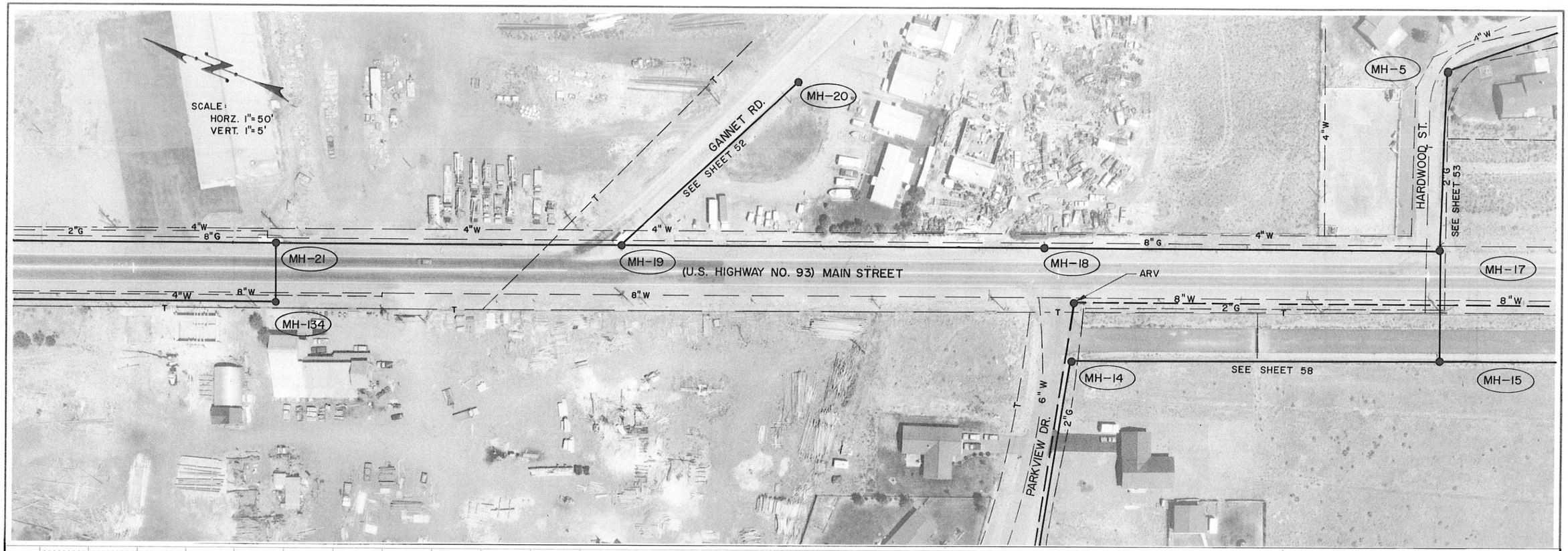

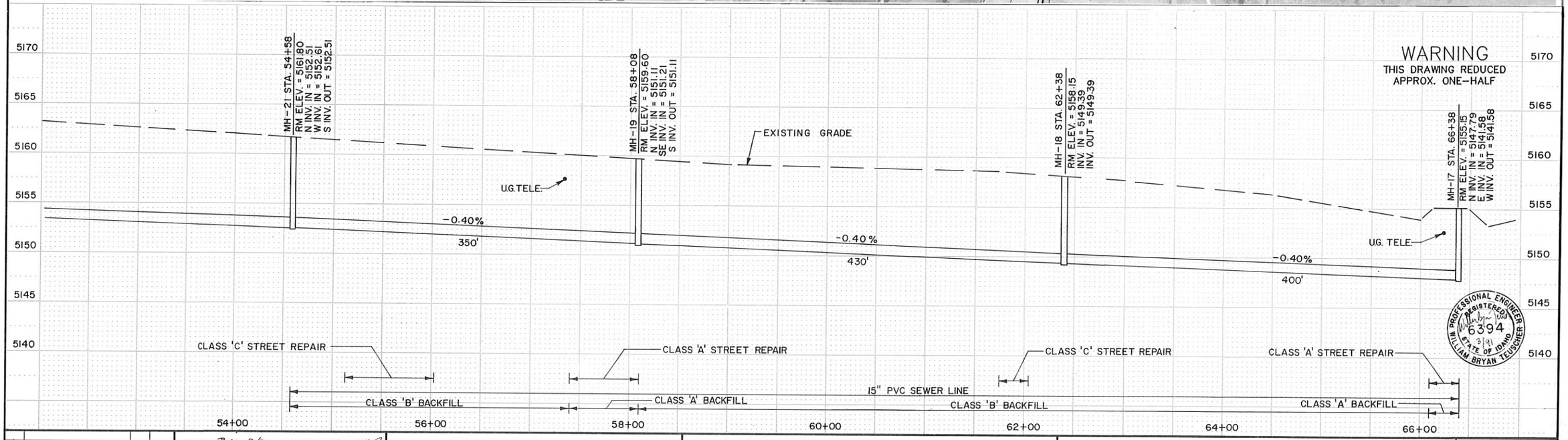

WARNING
THIS DRAWING REDUCED
APPROX. ONE-HALF

WILLIAM BRYAN TEUSCHER
6394
STATE OF IDAHO
PROFESSIONAL ENGINEER

NO.	REVISIONS	BY	DATE

DRAWN Burn 8/90 DATE — CHECKED 3/31 DATE
DESIGNED 3/91 DATE — PROJECT ENGINEER
APPROVED 3/31/91 DATE — PROJECT MANAGER

CITY OF BELLEVUE,
IDAHO

FORSGREN
ASSOCIATES / P.A.

WASTEWATER COLLECTION AND TREATMENT FACILITIES

HIGHWAY 93 (EAST SIDE)

PROJECT NO. 89067

SHEET NO. 50



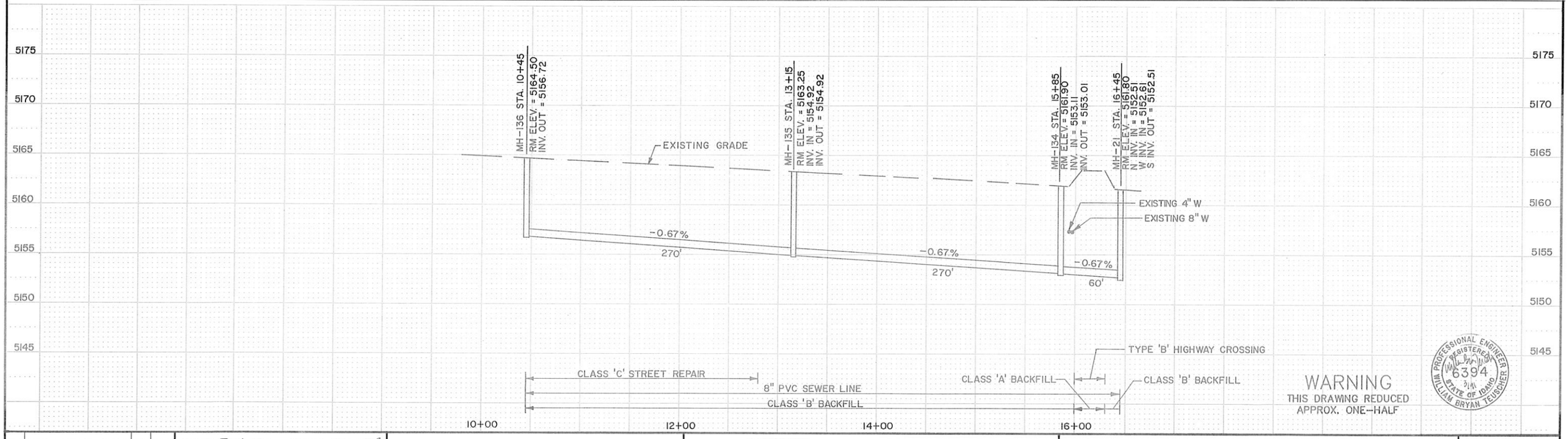

WARNING
THIS DRAWING REDUCED
APPROX. ONE-HALF

PROFESSIONAL ENGINEER
REGISTERED
6394
STATE OF IDAHO
WILLIAM BRYAN TEUSCHER

NO.	REVISIONS	BY	DATE

DRAWN BWM 8/90 DATE CHECKED 3/91 DATE
DESIGNED 3/91 DATE PROJECT ENGINEER
APPROVED 3/91 DATE PROJECT MANAGER

CITY OF BELLEVUE,
IDAHO

FORSGREN
ASSOCIATES / P.A.

WASTEWATER COLLECTION AND TREATMENT FACILITIES

HIGHWAY 93 (WEST SIDE)

PROJECT NO. 89067

SHEET NO. 51

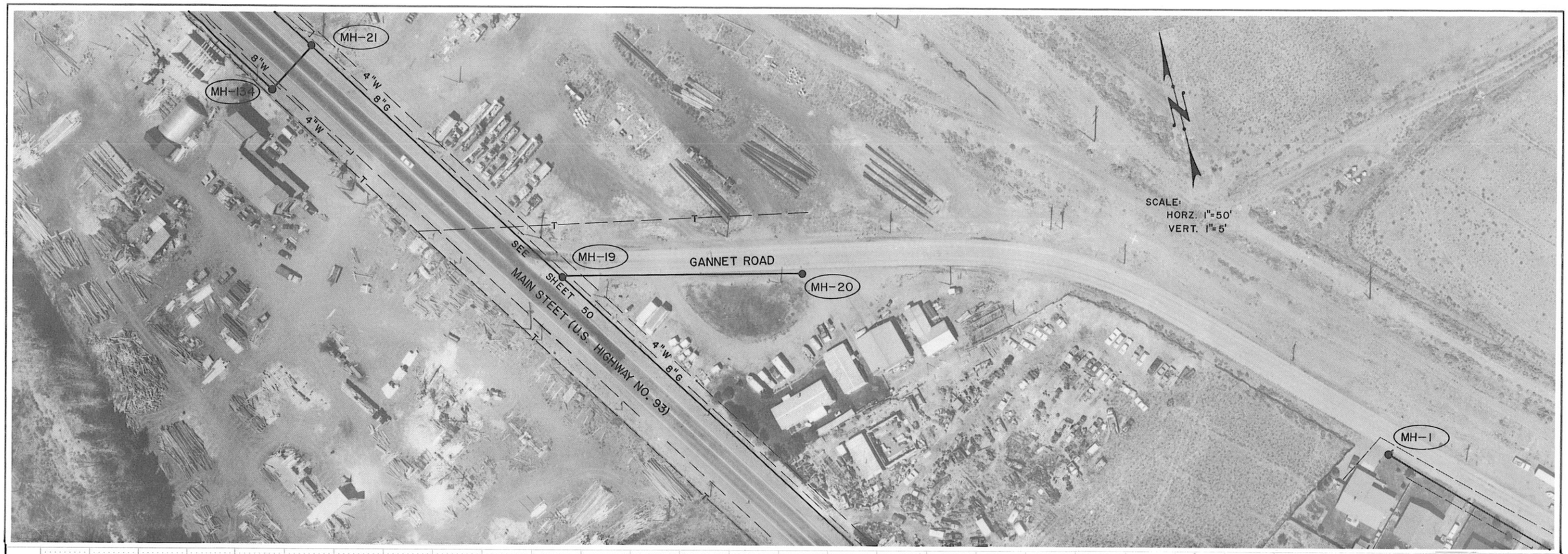

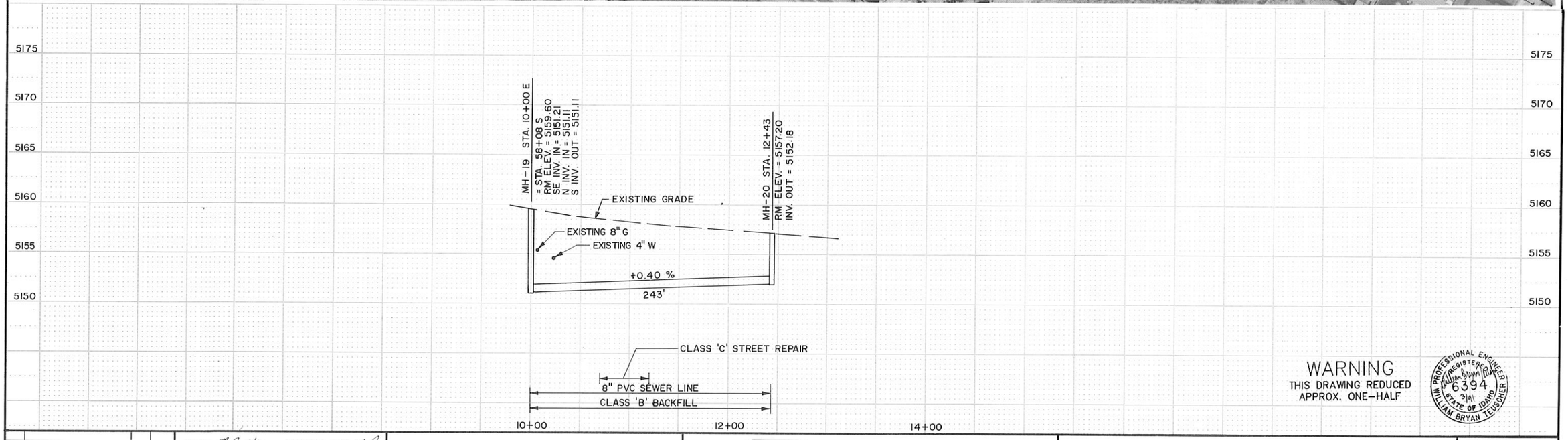

WARNING
THIS DRAWING REDUCED
APPROX. ONE-HALF

PROFESSIONAL ENGINEER
REGISTERED
6394
3/91
STATE OF IDAHO
WILLIAM BRYAN TEUSCHER

NO.	REVISIONS	BY	DATE

DRAWN M.L. 2/91 DATE CHECKED 2/91 DATE

DESIGNED 3/91 DATE William Bryan Teuscher PROJECT ENGINEER

APPROVED 3/91 DATE J.L.J. Myller PROJECT MANAGER

CITY OF BELLEVUE,
IDAHO

FORSGREN ASSOCIATES / P.A.

WASTEWATER COLLECTION AND TREATMENT FACILITIES

GANNET ROAD

PROJECT NO. 89067

SHEET NO. 52

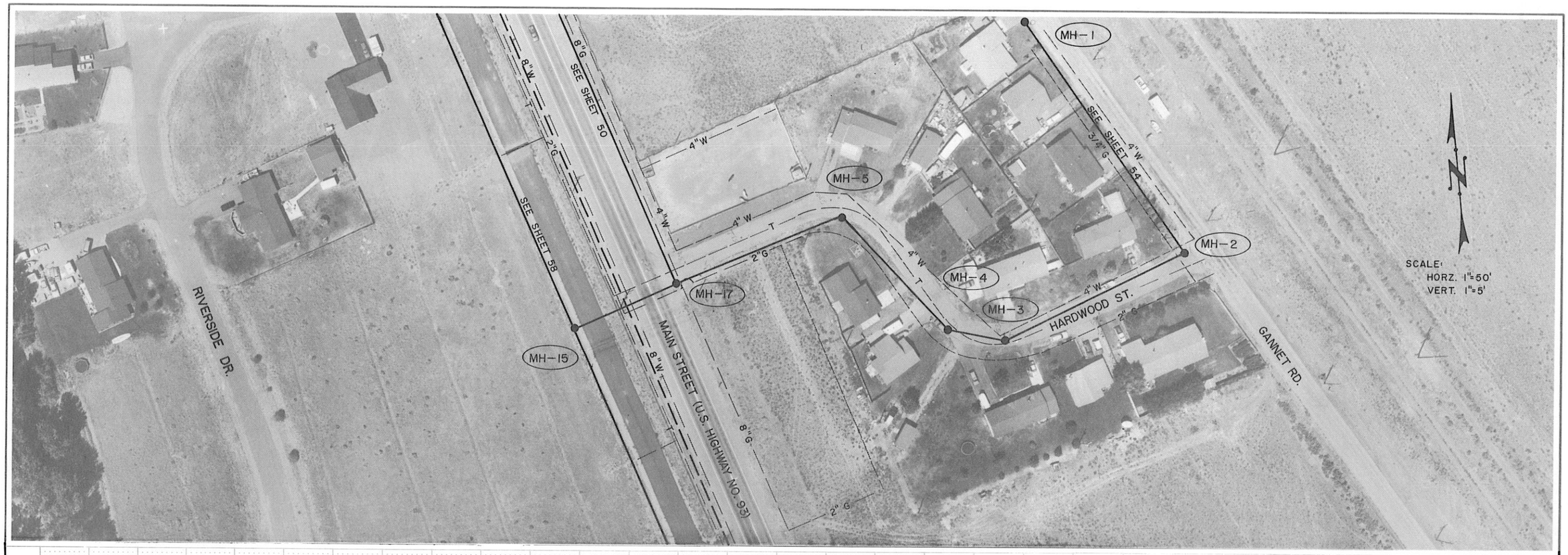

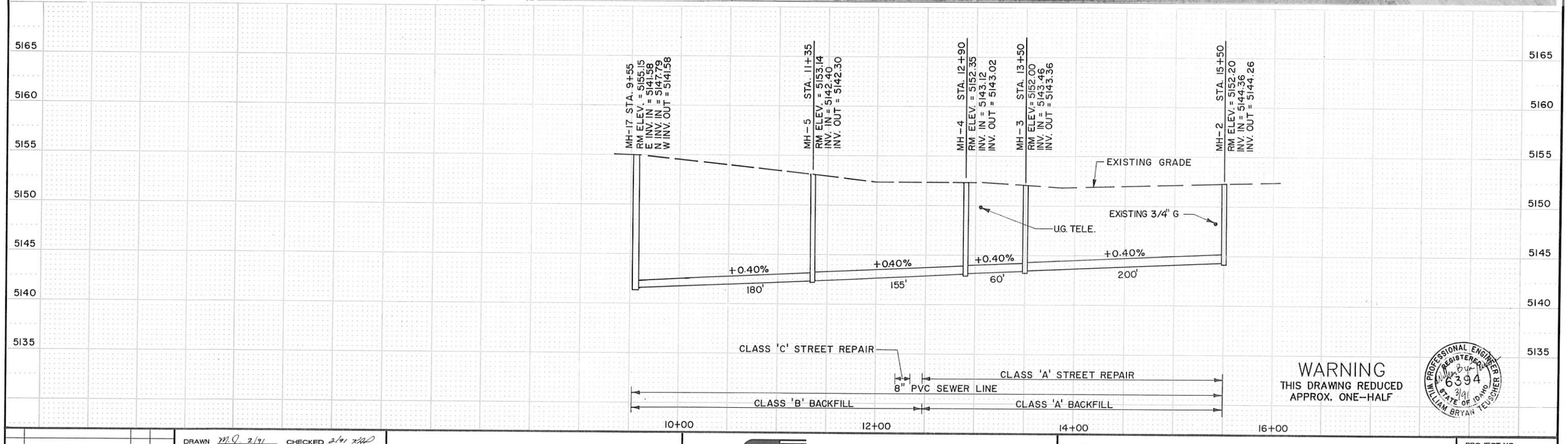

WARNING
THIS DRAWING REDUCED
APPROX. ONE-HALF

NO.	REVISIONS	BY	DATE

DRAWN MD 2/91 DATE — CHECKED 2/91 DATE

DESIGNED 3/91 DATE — PROJECT ENGINEER

APPROVED 3/91 DATE — PROJECT MANAGER

CITY OF BELLEVUE,
IDAHO

FORSGREN ASSOCIATES / P.A.

WASTEWATER COLLECTION AND TREATMENT FACILITIES

HARDWOOD ST.

PROJECT NO. 89067

SHEET NO. 53

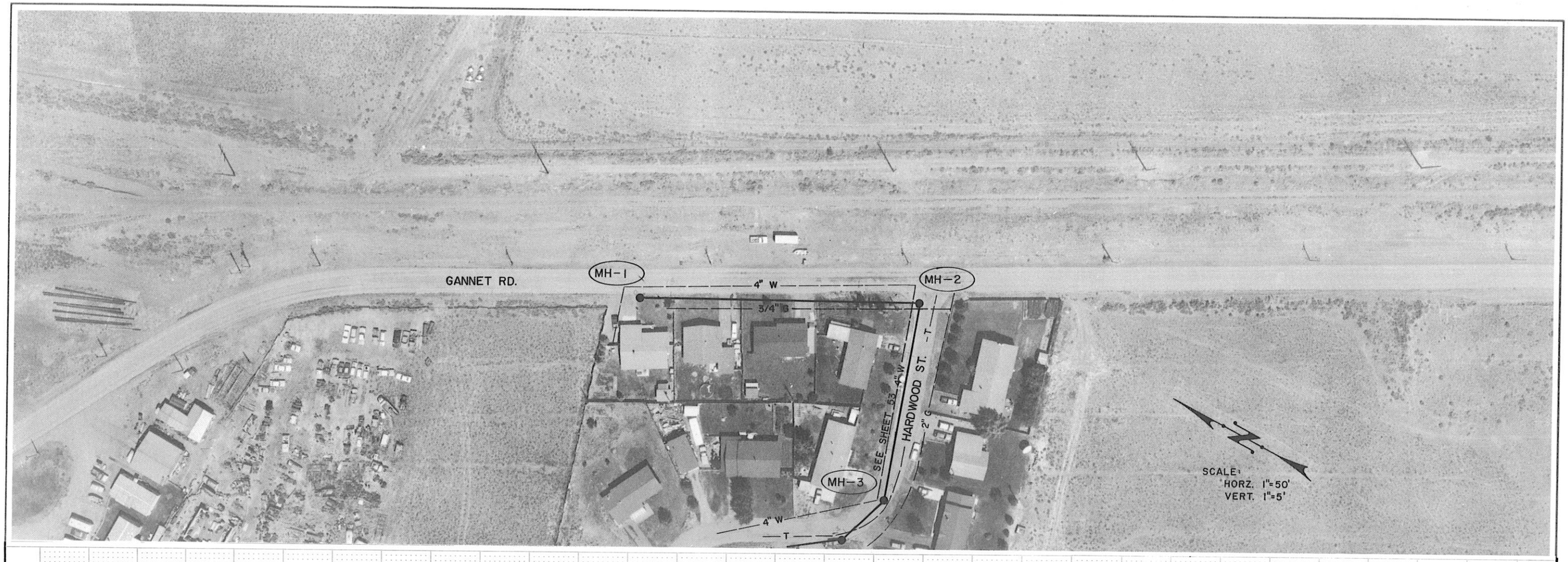

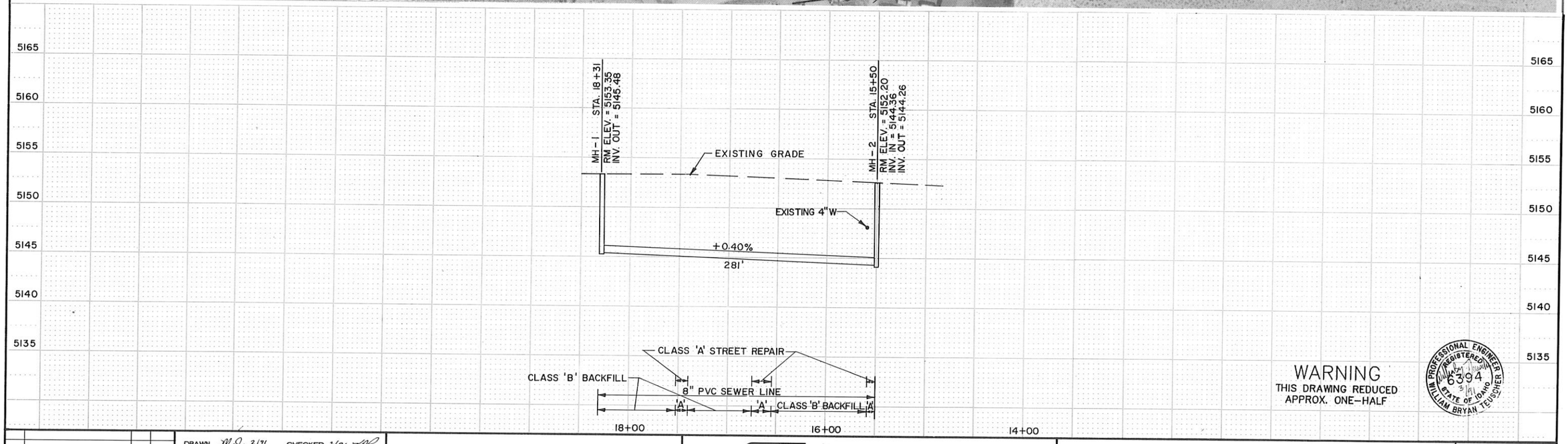

WARNING
THIS DRAWING REDUCED
APPROX. ONE-HALF

PROFESSIONAL ENGINEER
REGISTERED
5394
STATE OF IDAHO
WILLIAM BRYAN TEUSCHER

NO.	REVISIONS	BY	DATE

DRAWN M.J. 2/91 DATE — CHECKED 2/91 DATE

DESIGNED 3/91 DATE — PROJECT ENGINEER

APPROVED 3/91 DATE — PROJECT MANAGER

CITY OF BELLEVUE,
IDAHO

FORSGREN
ASSOCIATES / P.A.

WASTEWATER COLLECTION AND TREATMENT FACILITIES

GANNET ROAD

PROJECT NO. 89067

SHEET NO. 54

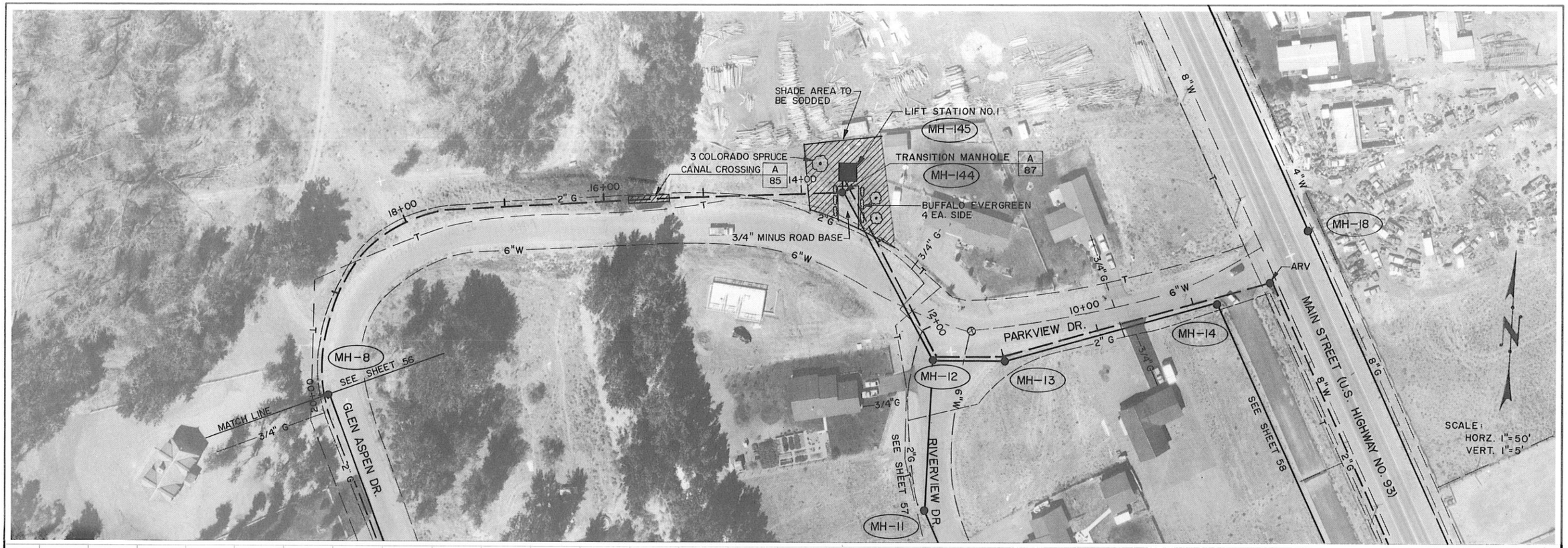

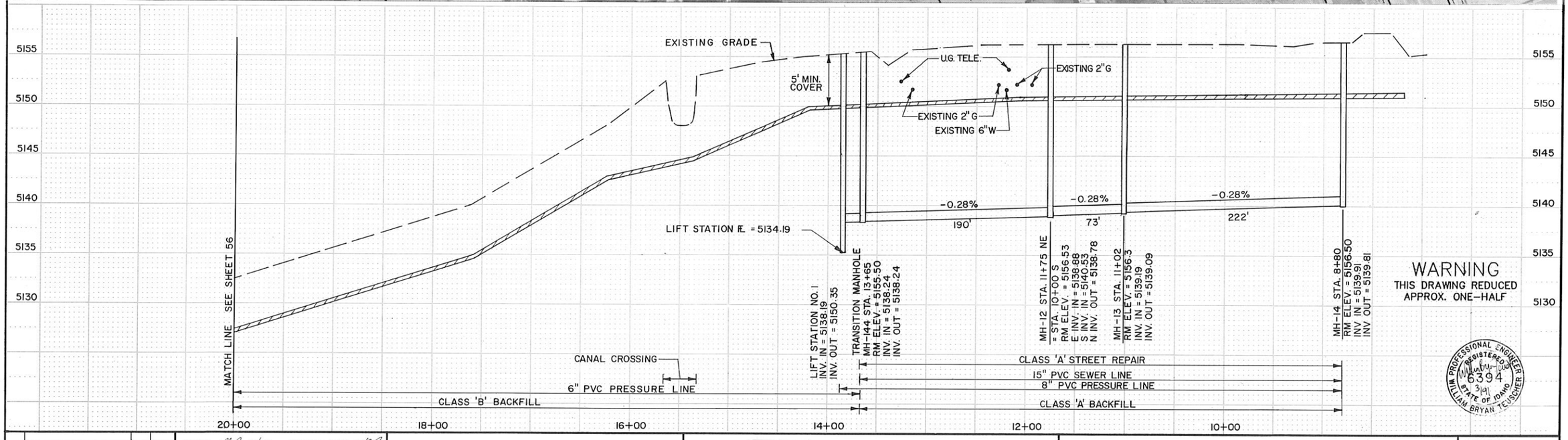

WARNING
THIS DRAWING REDUCED
APPROX. ONE-HALF

PROFESSIONAL ENGINEER REGISTERED 6394 STATE OF IDAHO WILLIAM BRYAN TEUSCHER

NO.	REVISIONS	BY	DATE

DRAWN MJ 2/91 DATE — CHECKED 2/91 DATE

DESIGNED 3/91 DATE — PROJECT ENGINEER

APPROVED 3/91 DATE — PROJECT MANAGER

CITY OF BELLEVUE,
IDAHO

FORSGREN ASSOCIATES / P.A.

WASTEWATER COLLECTION AND TREATMENT FACILITIES

GLEN ASPEN & PARKVIEW DR.

PROJECT NO. 89067

SHEET NO. 55

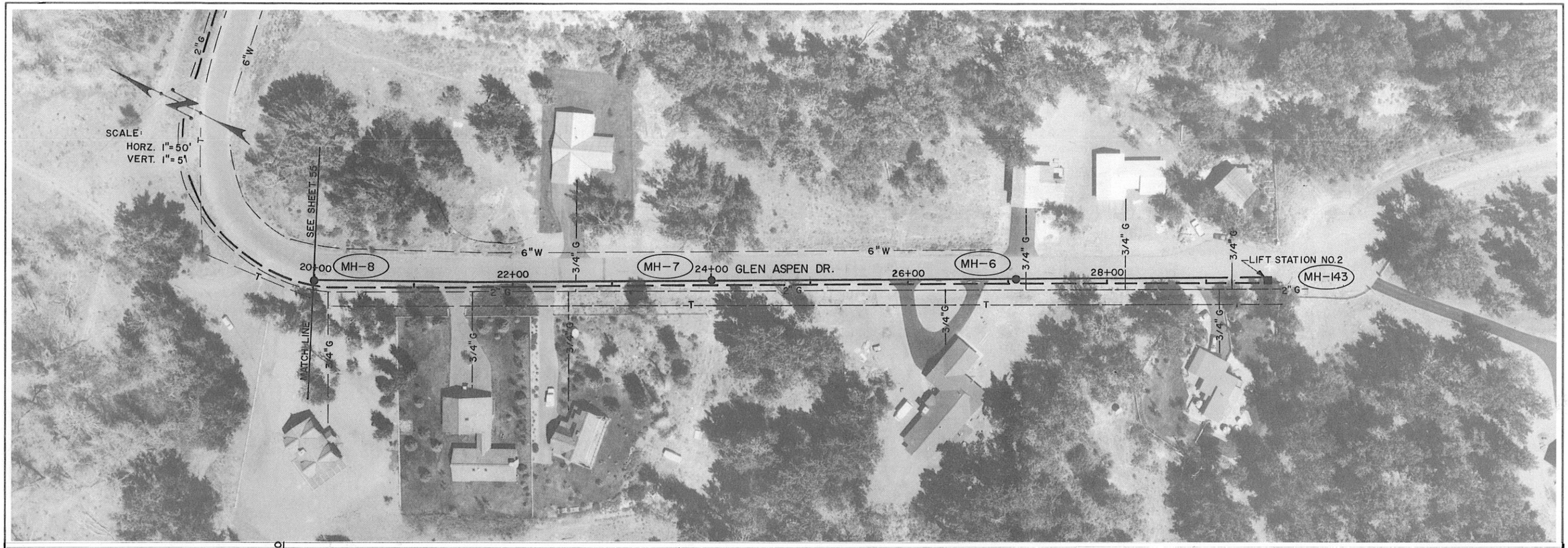

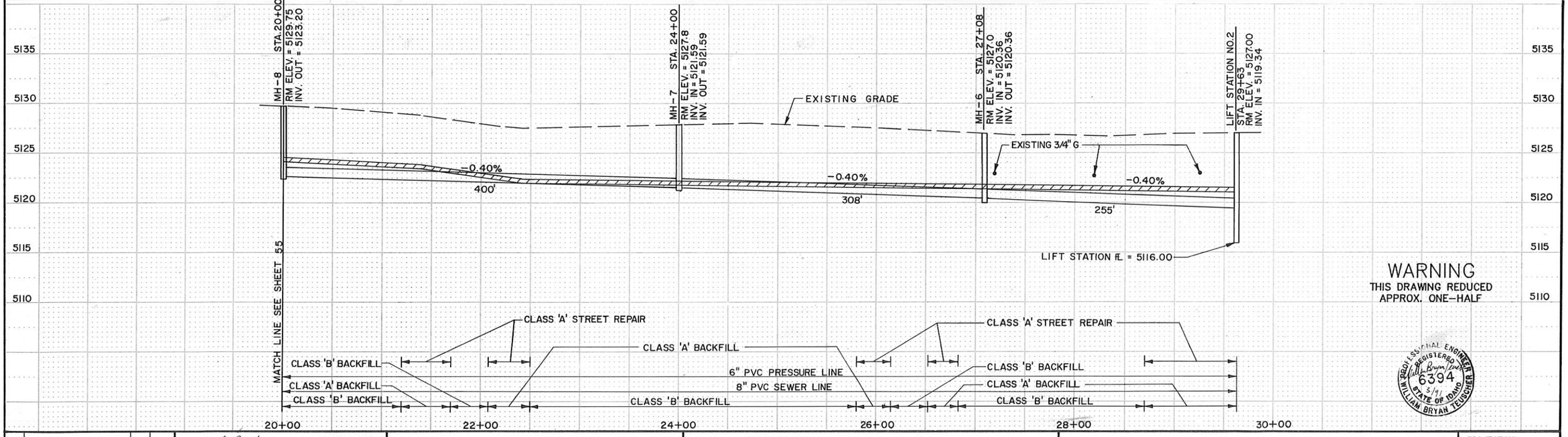

WARNING
THIS DRAWING REDUCED
APPROX. ONE-HALF

PROFESSIONAL ENGINEER
REGISTERED
6394
5/91
STATE OF IDAHO
WILLIAM BRYAN TEUSCHER

NO.	REVISIONS	BY	DATE

DRAWN M.J. 2/91 DATE — CHECKED 2/91 DATE

DESIGNED 3/91 DATE — PROJECT ENGINEER

APPROVED 3/91 DATE — PROJECT MANAGER

CITY OF BELLEVUE,
IDAHO

FORSGREN
ASSOCIATES / P.A.

WASTEWATER COLLECTION AND TREATMENT FACILITIES

GLEN ASPEN DR.

PROJECT NO. 89067

SHEET NO. 56

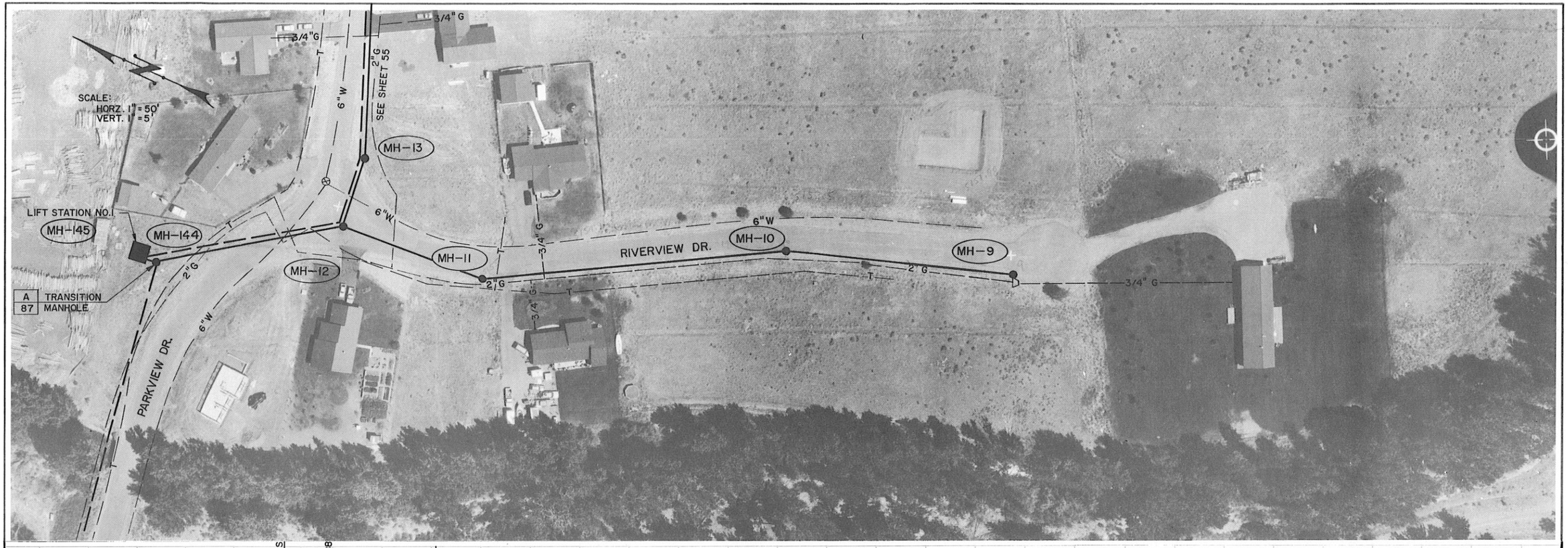

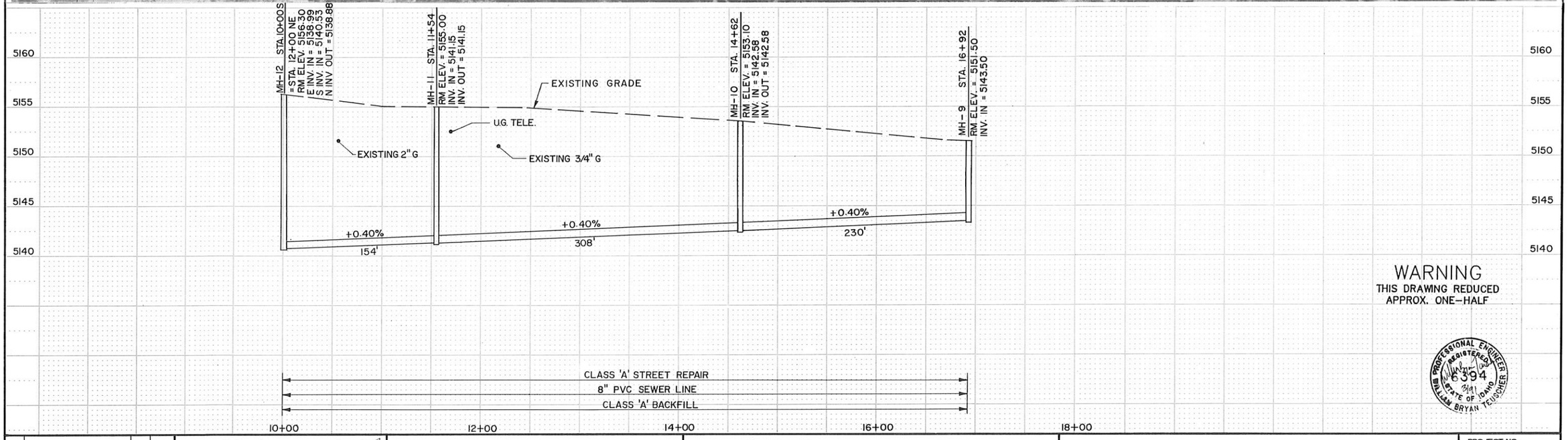

WARNING
THIS DRAWING REDUCED
APPROX. ONE-HALF

NO.	REVISIONS	BY	DATE

DRAWN MJ 2/91 DATE — CHECKED 2/91 DATE
DESIGNED 3/91 DATE — PROJECT ENGINEER
APPROVED 3/91 DATE — PROJECT MANAGER

CITY OF BELLEVUE,
IDAHO

FORSGREN ASSOCIATES / P.A.

WASTEWATER COLLECTION AND TREATMENT FACILITIES

RIVERVIEW DR.

PROJECT NO. 89067

SHEET NO. 57

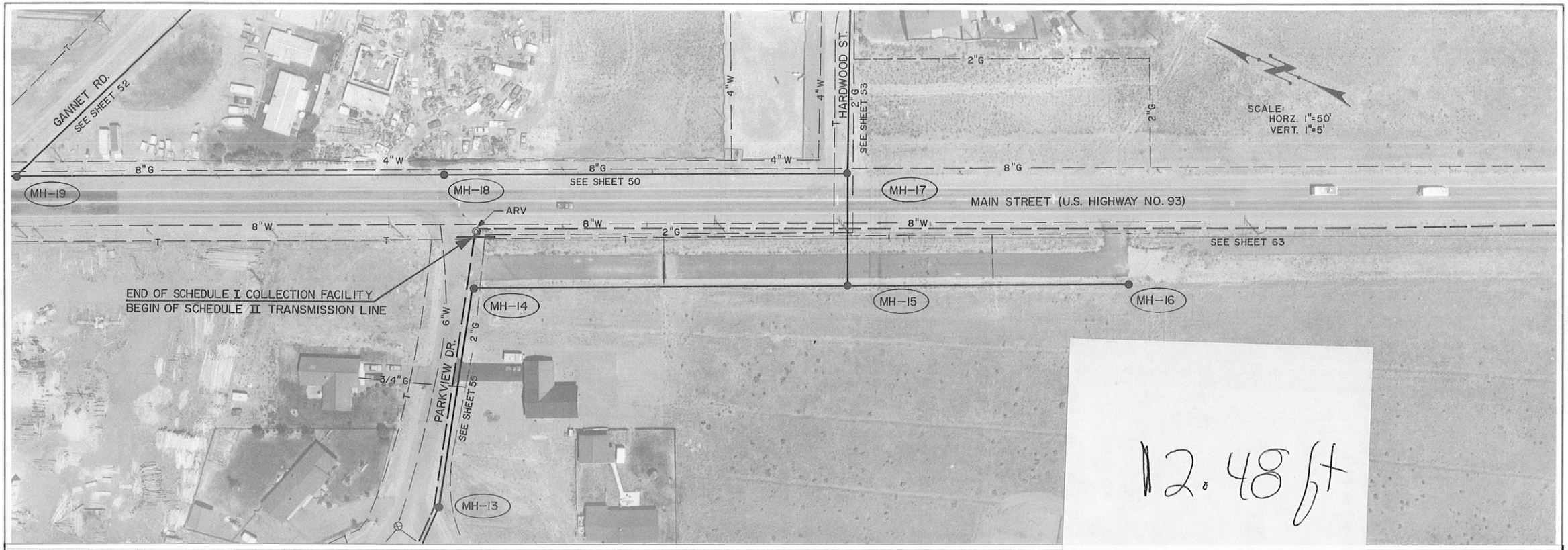

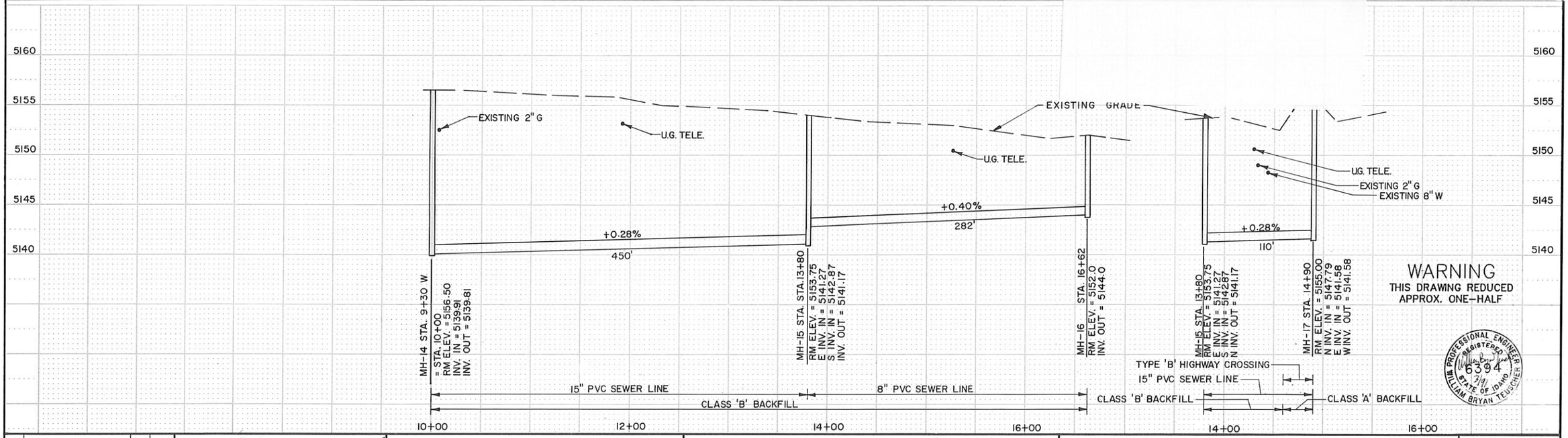

WARNING
THIS DRAWING REDUCED
APPROX. ONE-HALF

PROFESSIONAL ENGINEER
REGISTERED
6394
3/91
STATE OF IDAHO
WILLIAM BRYAN TEUSCHER

NO.	REVISIONS	BY	DATE

DRAWN M.J. 2/91 DATE CHECKED 2/91 DATE
DESIGNED 3/91 DATE William Bryan Teuscher PROJECT ENGINEER
APPROVED 3/91 DATE J.W. Miller PROJECT MANAGER

CITY OF BELLEVUE,
IDAHO

FORSGREN
ASSOCIATES / P.A.

WASTEWATER COLLECTION AND TREATMENT FACILITIES

PROJECT NO. 89067

SHEET NO. 58

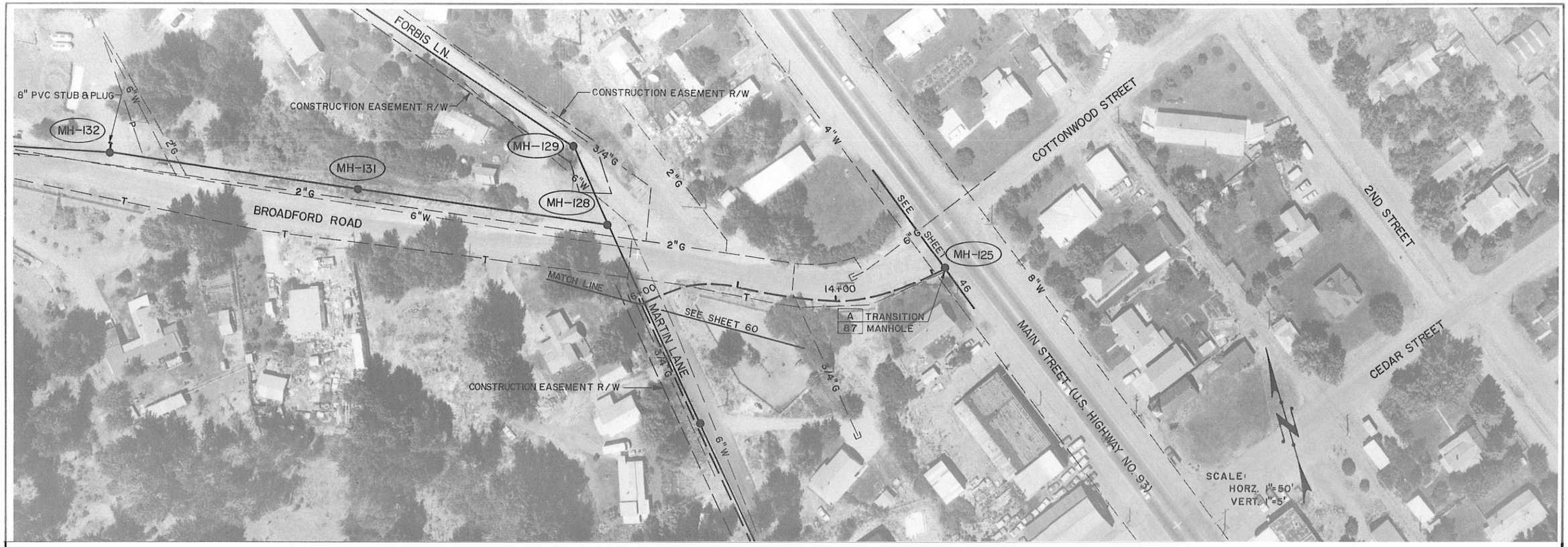

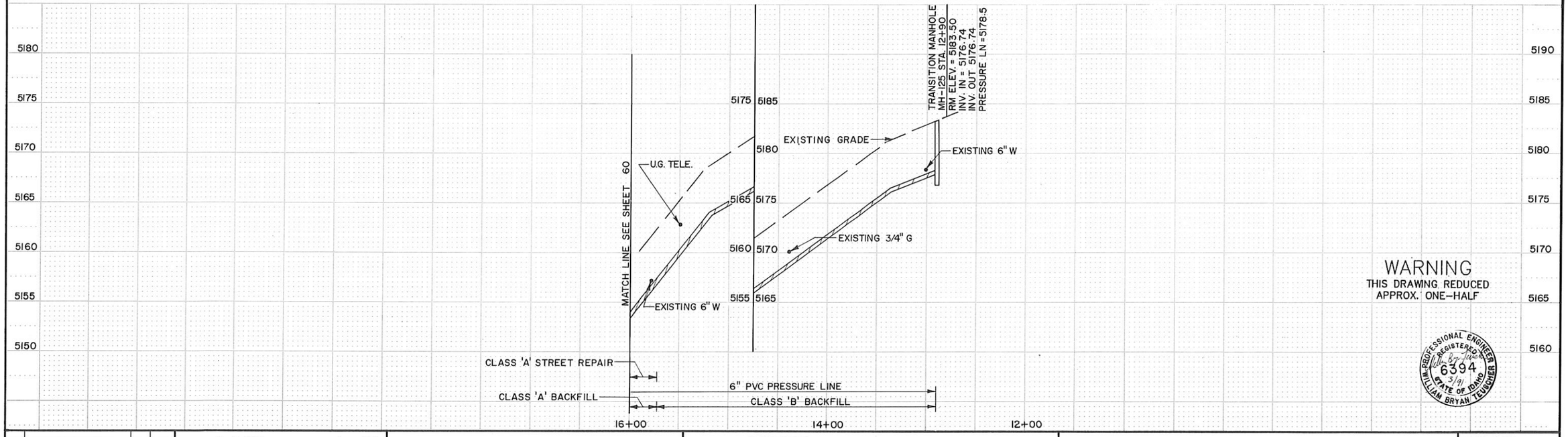

WARNING
THIS DRAWING REDUCED
APPROX. ONE-HALF

PROFESSIONAL ENGINEER REGISTERED 6394 3/91 STATE OF IDAHO WILLIAM BRYAN TEUSCHER

NO.	REVISIONS	BY	DATE

DRAWN BWM 8/90 DATE CHECKED 3/91 DATE
DESIGNED 3/91 DATE PROJECT ENGINEER
APPROVED 3-91 DATE PROJECT MANAGER

CITY OF BELLEVUE, IDAHO

FORSGREN ASSOCIATES / P.A.

WASTEWATER COLLECTION AND TREATMENT FACILITIES

BROADFORD RD.

PROJECT NO. 89067

SHEET NO. 59

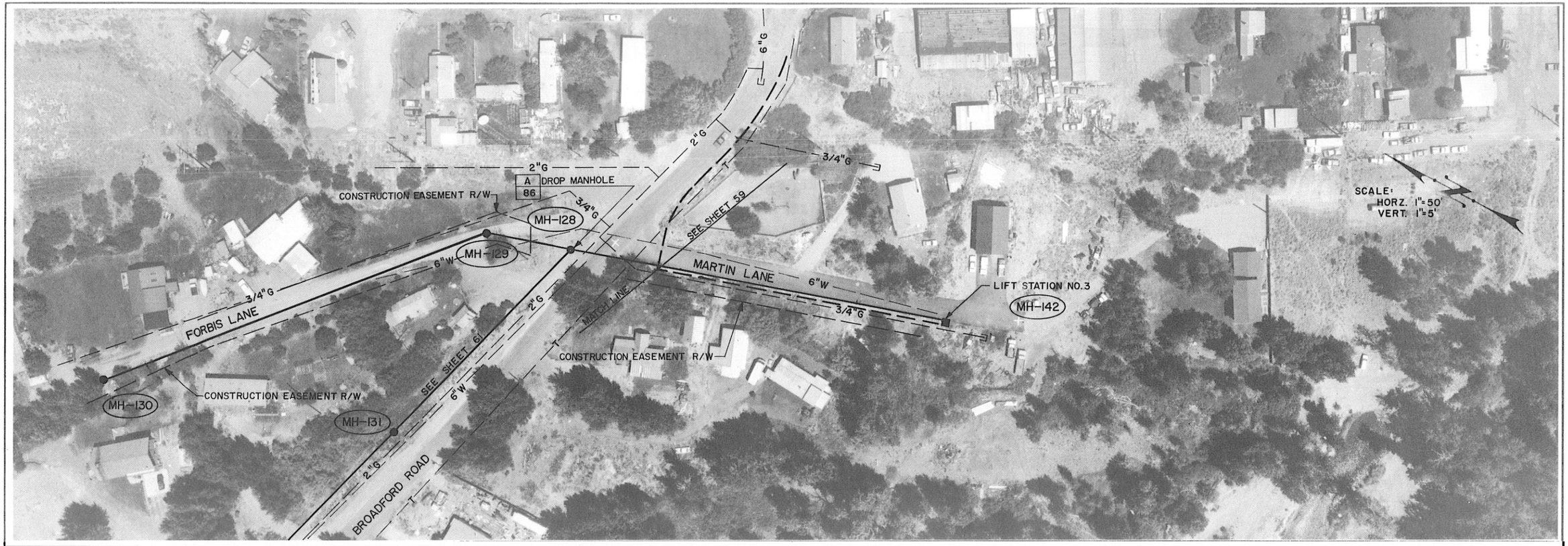

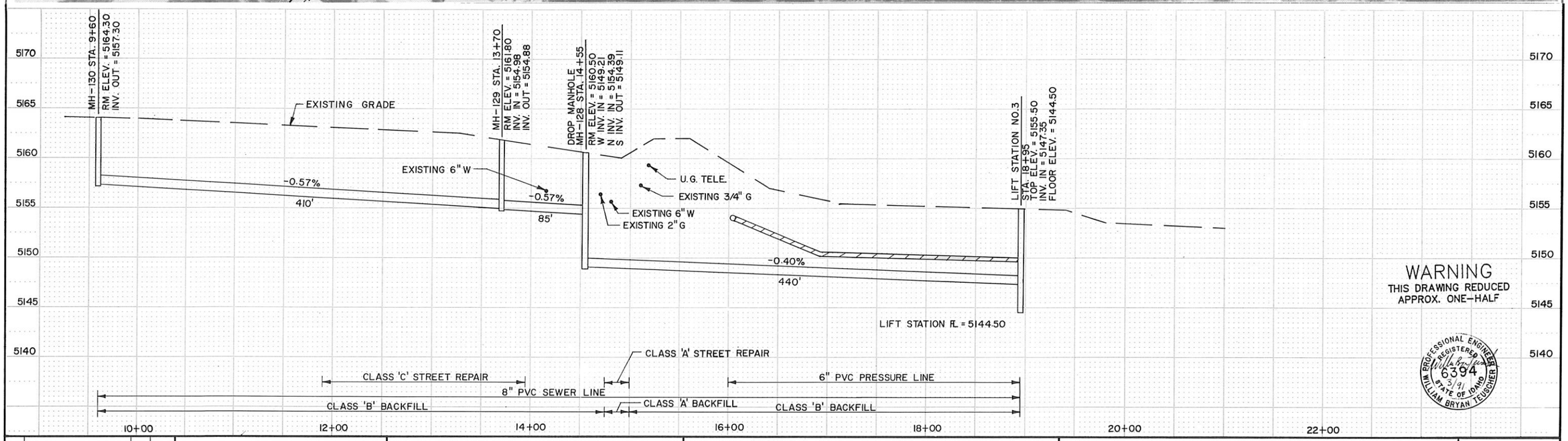

WARNING
THIS DRAWING REDUCED
APPROX. ONE-HALF

PROFESSIONAL ENGINEER
REGISTERED
6394
3/91
STATE OF IDAHO
WILLIAM BRYAN TEUSCHER

NO.	REVISIONS	BY	DATE

DRAWN RWM 8/90 DATE CHECKED 2/91 DATE
DESIGNED 3/91 DATE PROJECT ENGINEER
APPROVED 3/91 DATE PROJECT MANAGER

CITY OF BELLEVUE,
IDAHO

FORSGREN ASSOCIATES / P.A.

WASTEWATER COLLECTION AND TREATMENT FACILITIES

FORBIS & MARTIN LN.

PROJECT NO. 89067

SHEET NO. 60

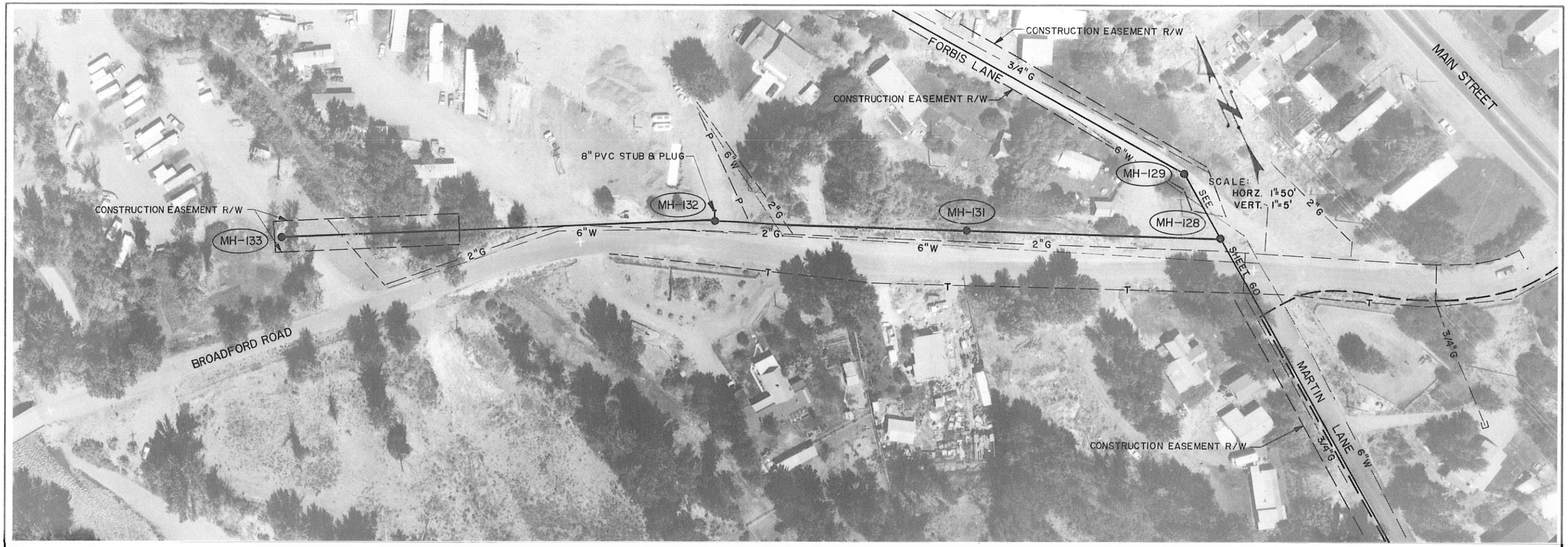

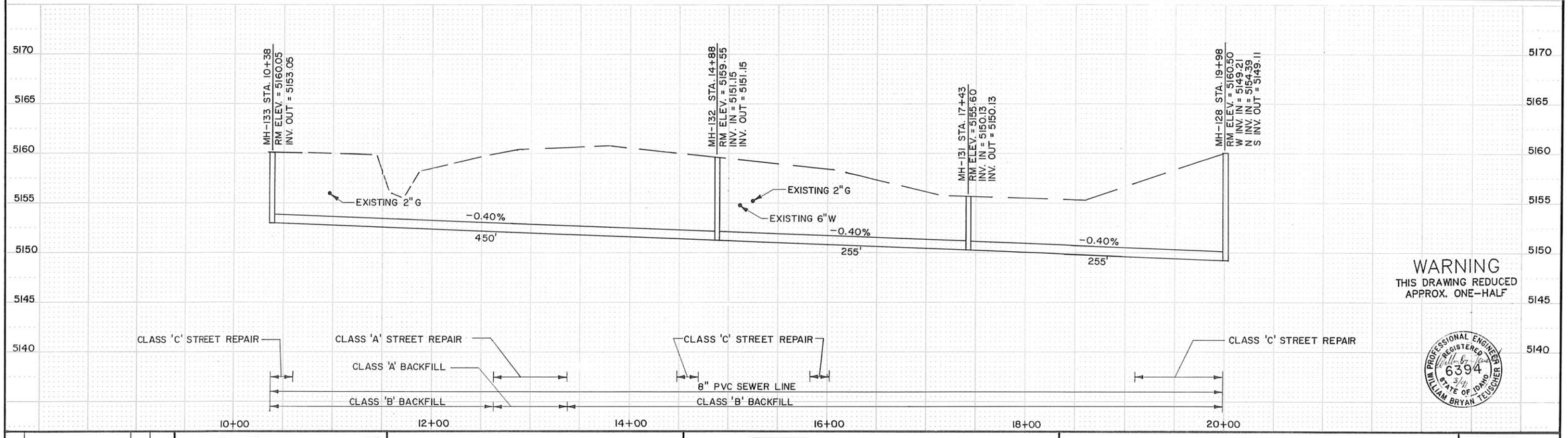

WARNING
THIS DRAWING REDUCED
APPROX. ONE-HALF

REGISTERED PROFESSIONAL ENGINEER
6394
3/91
STATE OF IDAHO
WILLIAM BRYAN TEUSCHER

NO.	REVISIONS	BY	DATE

DRAWN BWM 8/90 DATE CHECKED 2/91 DATE
DESIGNED 3/91 DATE PROJECT ENGINEER
APPROVED 3/91 DATE PROJECT MANAGER

CITY OF BELLEVUE,
IDAHO

FORSGREN ASSOCIATES / P.A.

WASTEWATER COLLECTION AND TREATMENT FACILITIES

BROADFORD RD.

PROJECT NO. 89067

SHEET NO. 61

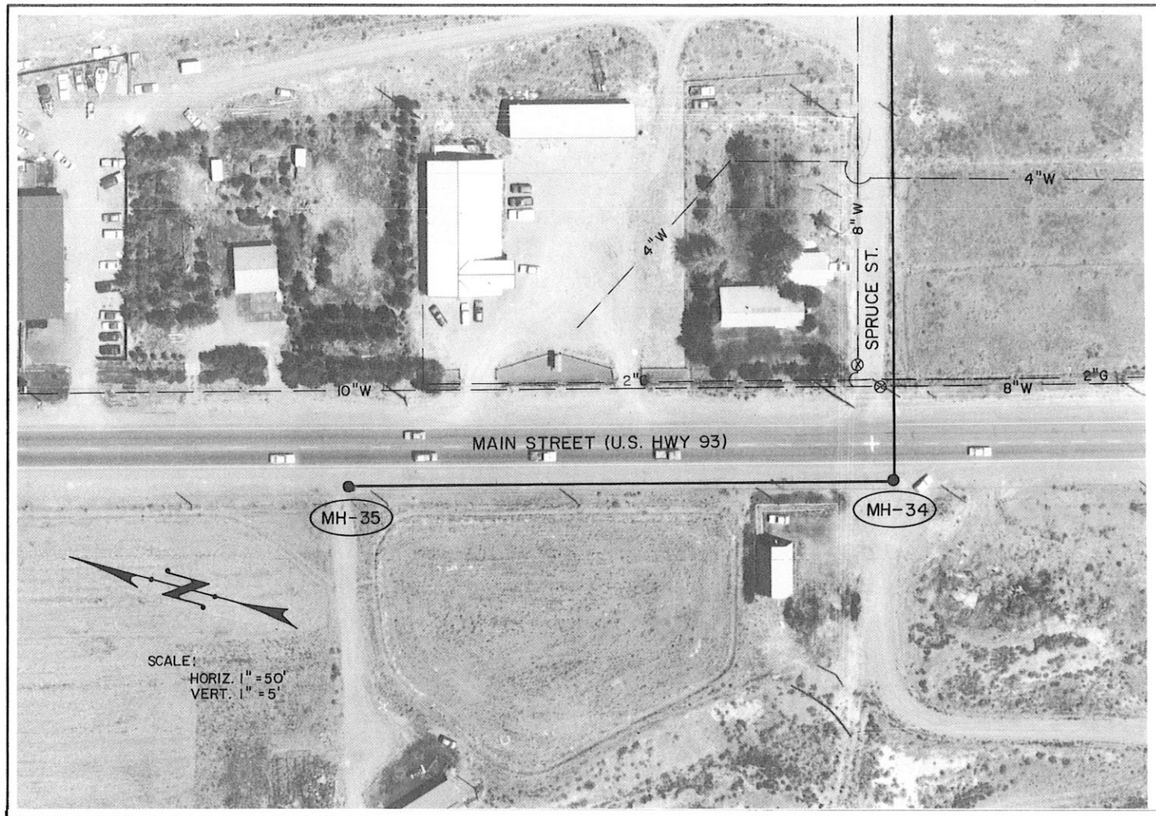

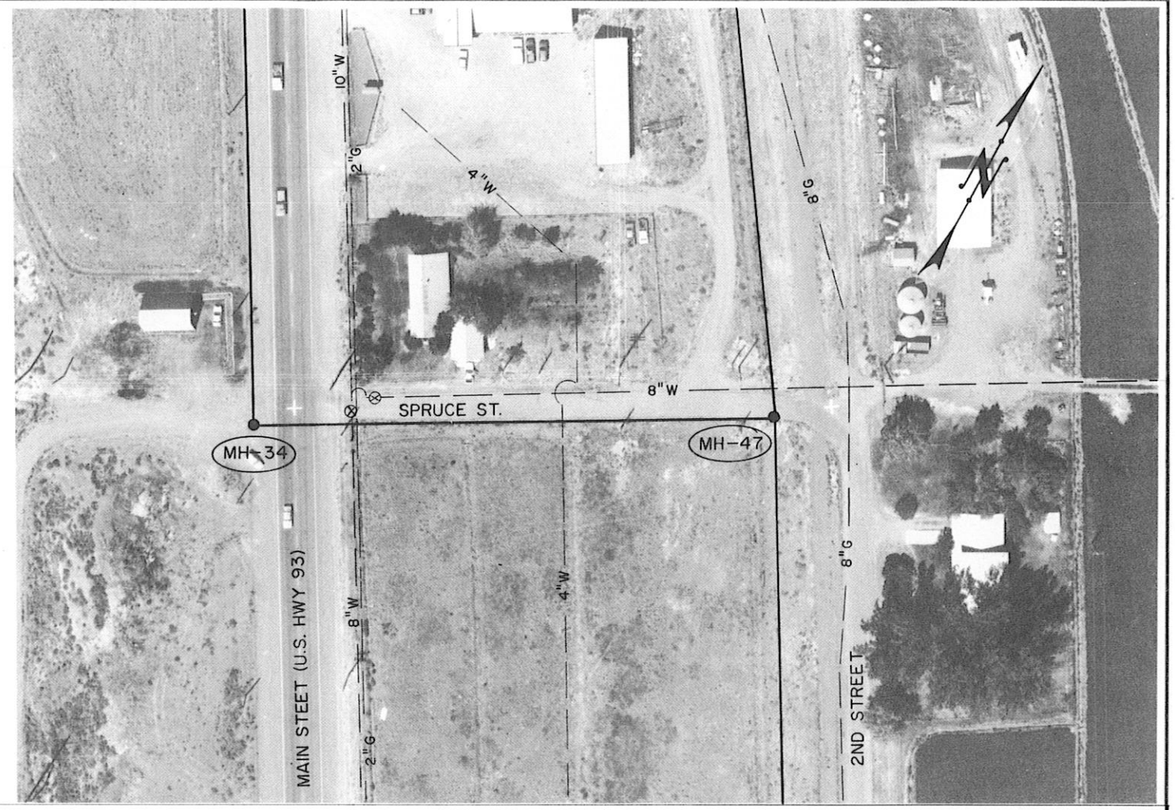

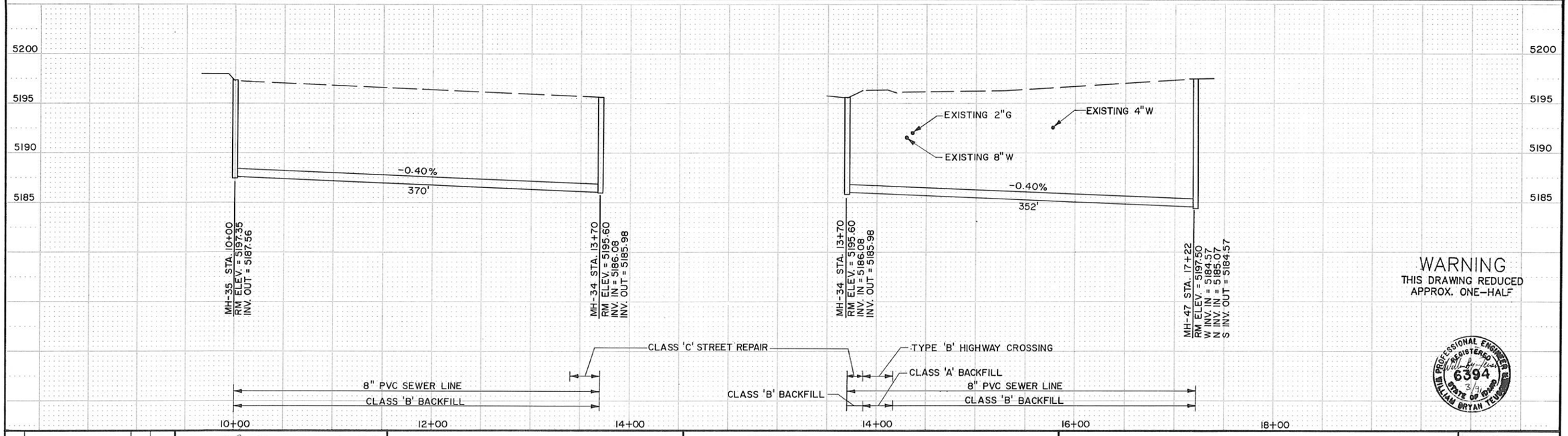

WARNING
THIS DRAWING REDUCED
APPROX. ONE-HALF

PROFESSIONAL ENGINEER REGISTERED 6394 STATE OF IDAHO WILLIAM BRYAN TEVIS

NO.	REVISIONS	BY	DATE

DRAWN M.A. 1/91 DATE CHECKED 2/91 DATE

DESIGNED 3/91 DATE PROJECT ENGINEER

APPROVED 3/91 DATE PROJECT MANAGER

CITY OF BELLEVUE,
IDAHO

FORSGREN ASSOCIATES / P.A.

WASTEWATER COLLECTION & TREATMENT FACILITIES

MAIN AND SPRUCE STREET

PROJECT NO. 89067

SHEET NO. 62

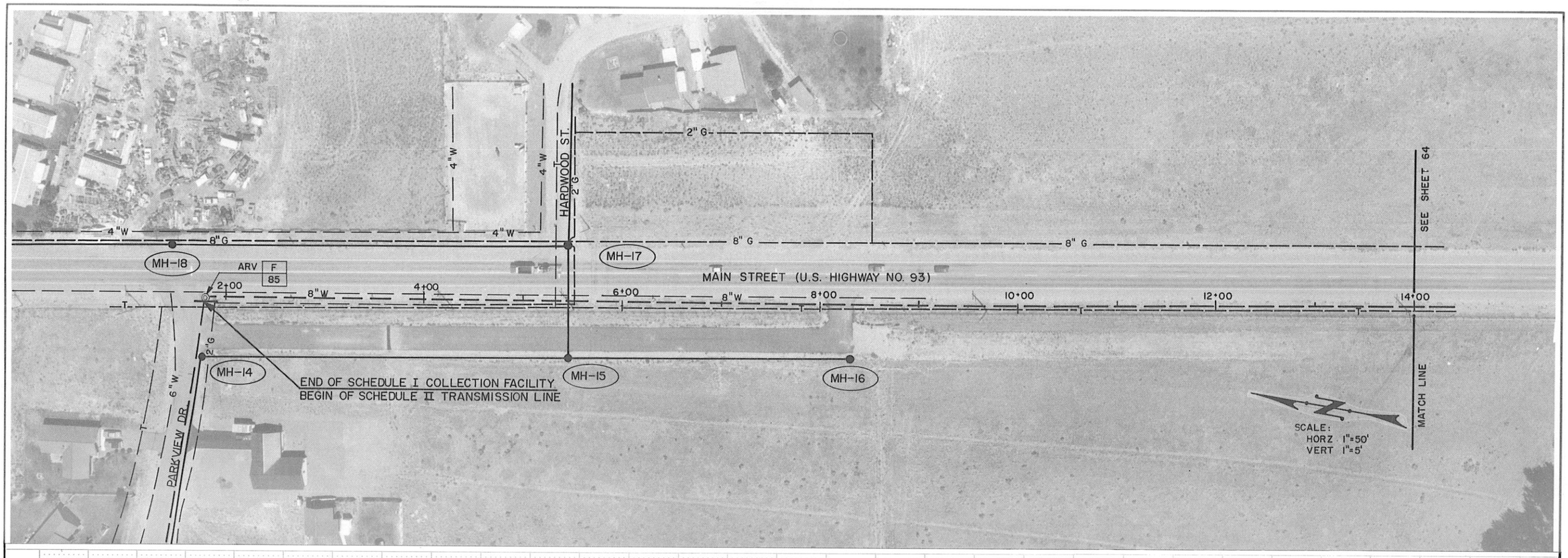

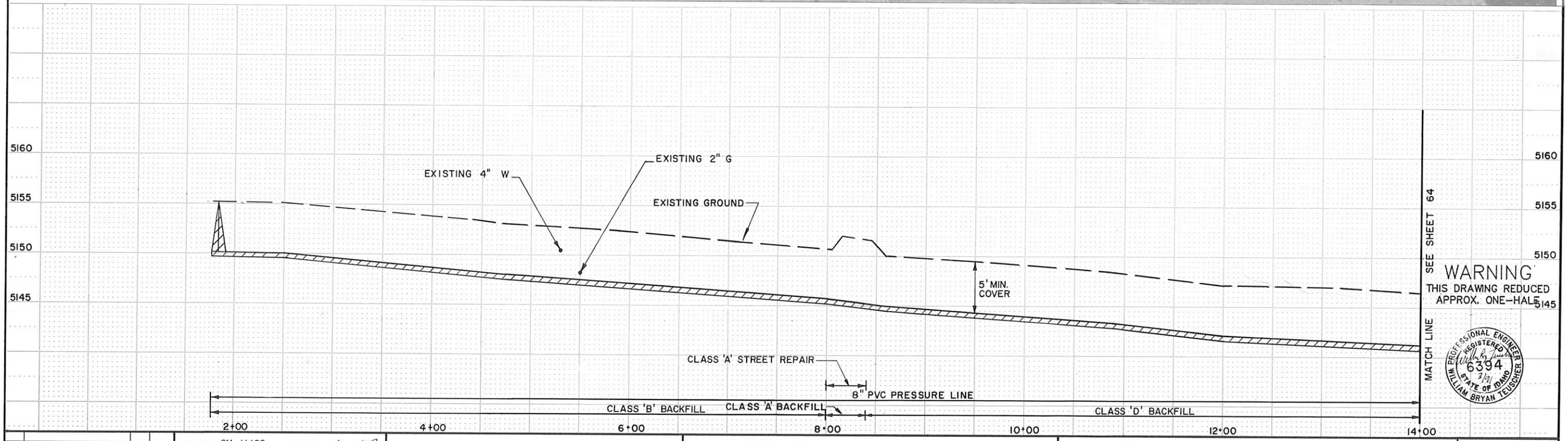

WARNING
THIS DRAWING REDUCED
APPROX. ONE-HALF

WILLIAM PROFESSIONAL ENGINEER REGISTERED 6394 3/91 STATE OF IDAHO WILLIAM BRYAN TEUSCHER

NO.	REVISIONS	BY	DATE

DRAWN CM 11/90 DATE — CHECKED 3/91 DATE

DESIGNED 3/91 DATE — PROJECT ENGINEER

APPROVED 3/91 DATE — PROJECT MANAGER

CITY OF BELLEVUE,
IDAHO

FORSGREN ASSOCIATES / P.A.

WASTEWATER COLLECTION AND TREATMENT FACILITIES

PRESSURE LINE

PROJECT NO. 89067

SHEET NO. 63

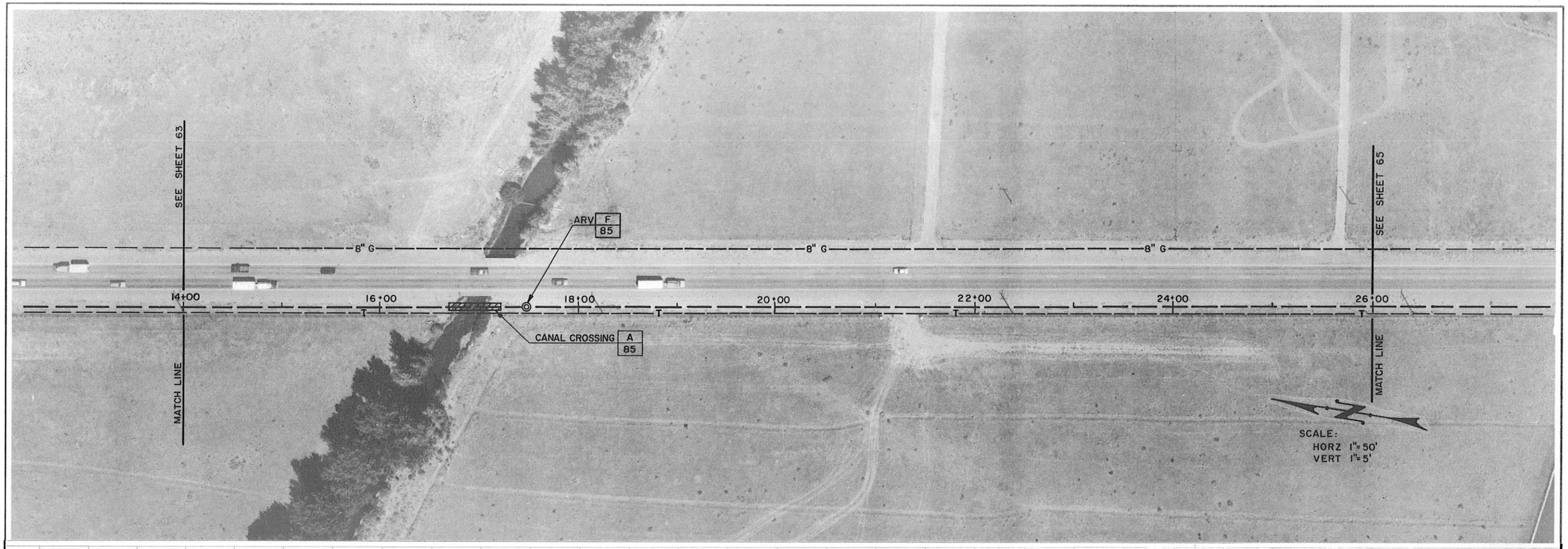

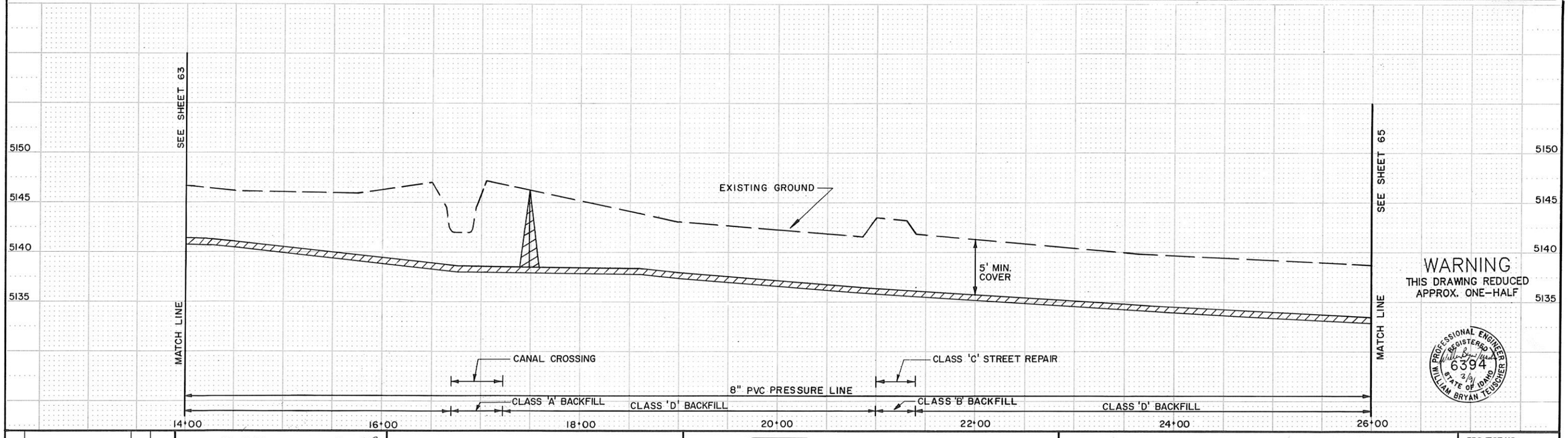

WARNING
THIS DRAWING REDUCED APPROX. ONE-HALF

PROFESSIONAL ENGINEER REGISTERED 6394 STATE OF IDAHO WILLIAM BRYAN TEUSCHER

NO.	REVISIONS	BY	DATE

DRAWN CM 11/90 DATE — CHECKED 2/91 DATE

DESIGNED 3/91 DATE — PROJECT ENGINEER

APPROVED 3/91 DATE — PROJECT MANAGER

CITY OF BELLEVUE, IDAHO

FORSGREN ASSOCIATES / P.A.

WASTEWATER COLLECTION AND TREATMENT FACILITIES

PRESSURE LINE

PROJECT NO. 89067

SHEET NO. 64

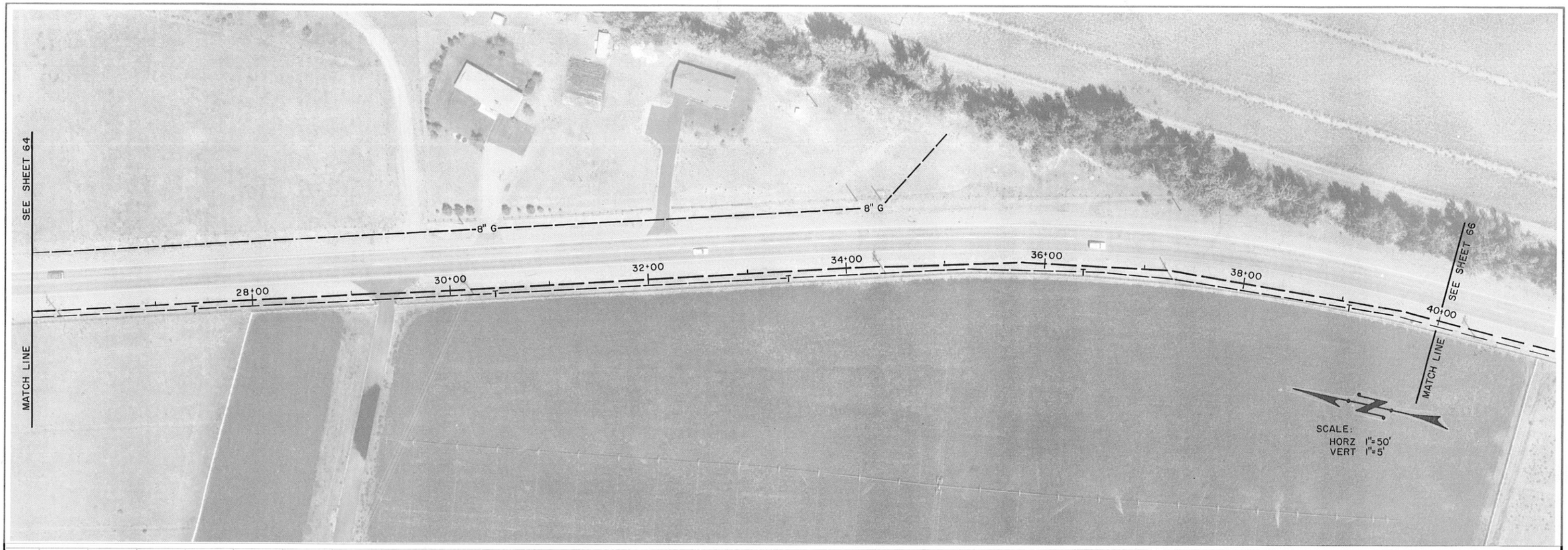

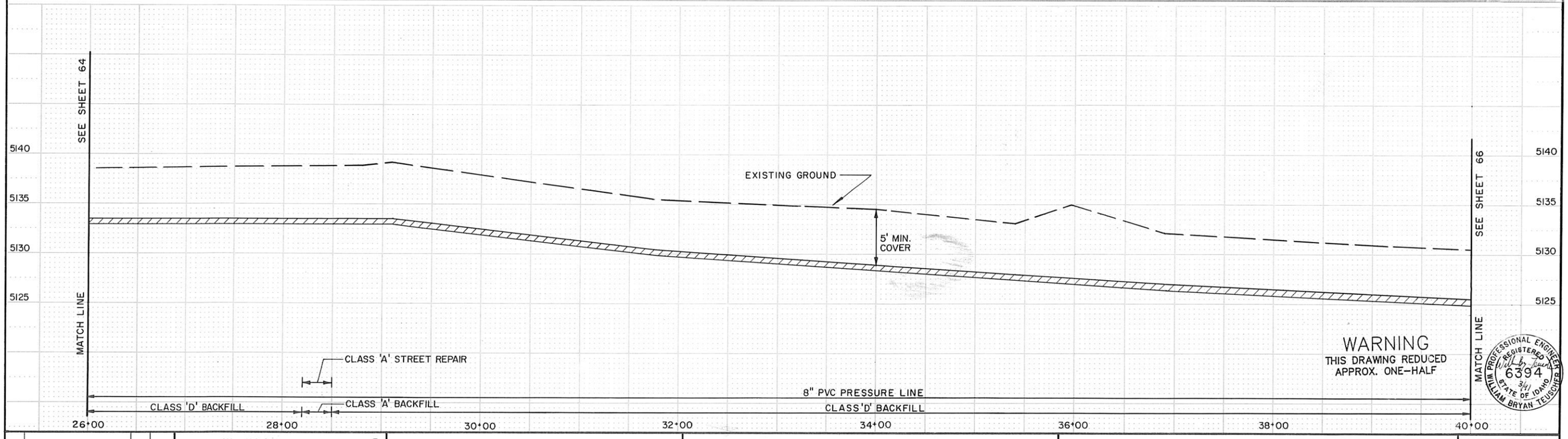

NO.	REVISIONS	BY	DATE

DRAWN CM 11/90 (DATE) CHECKED 3/91 (DATE)
DESIGNED 3/91 (DATE) William Bryan Teuscher (PROJECT ENGINEER)
APPROVED 3/91 (DATE) J. W. Mills (PROJECT MANAGER)

CITY OF BELLEVUE,
IDAHO

FORSGREN ASSOCIATES / P.A.

WASTEWATER COLLECTION AND TREATMENT FACILITIES

PROJECT NO. 89067

PRESSURE LINE

SHEET NO. 65

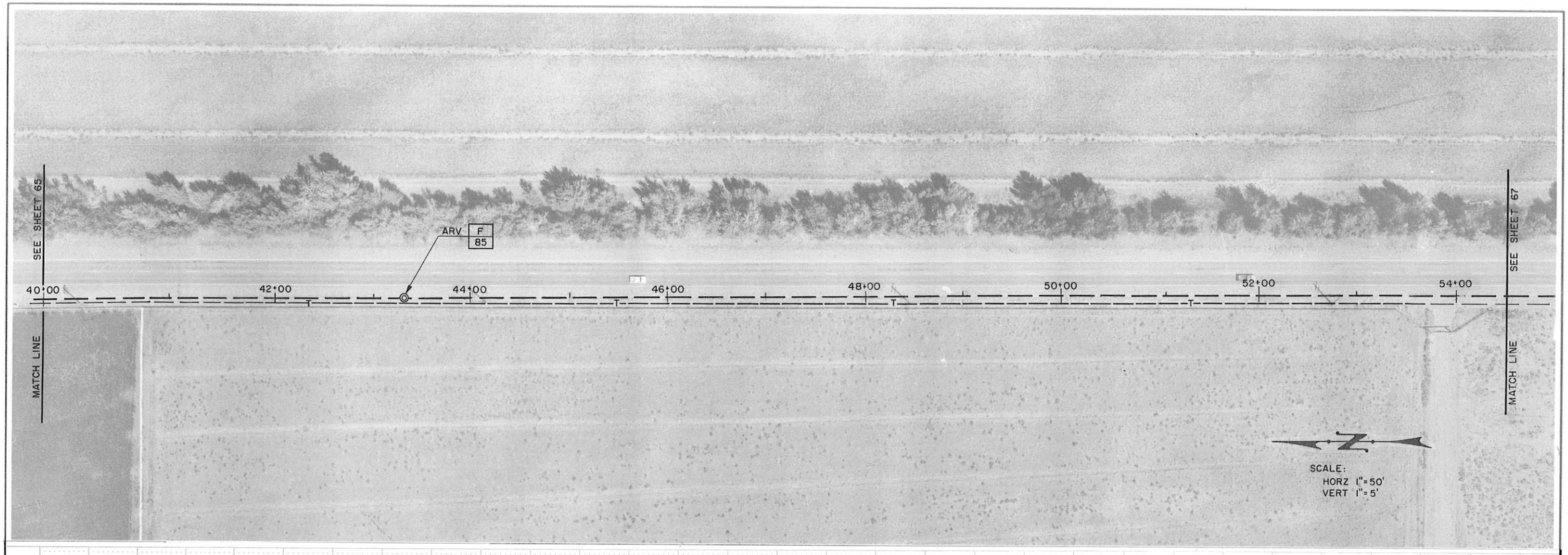

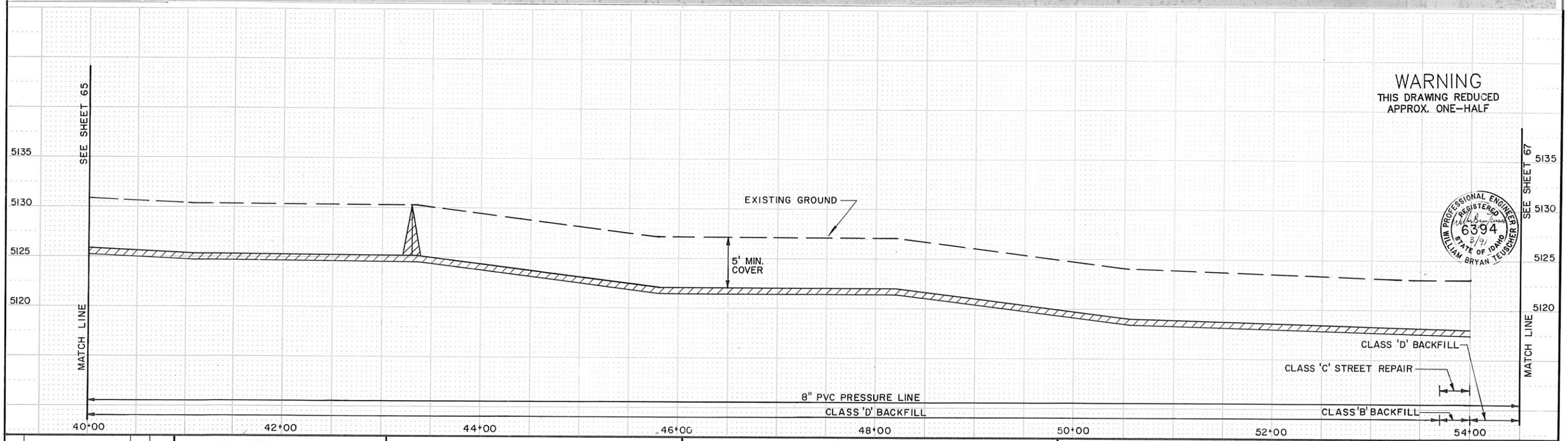

NO.	REVISIONS	BY	DATE

DRAWN CM 11/90 DATE — CHECKED 3/91 DATE

DESIGNED 3/91 DATE — PROJECT ENGINEER

APPROVED 3/91 DATE — PROJECT MANAGER

CITY OF BELLEVUE,
IDAHO

FORSGREN ASSOCIATES / P.A.

WASTEWATER COLLECTION AND TREATMENT FACILITIES

PRESSURE LINE

PROJECT NO. 89067

SHEET NO. 66

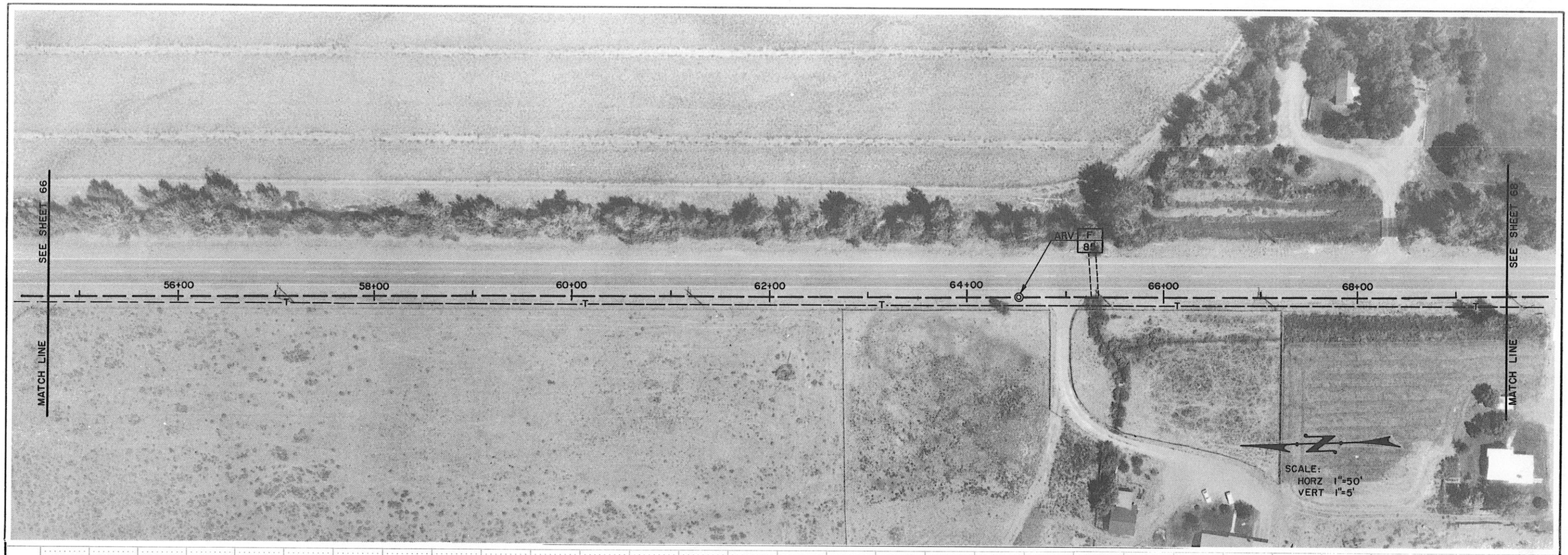

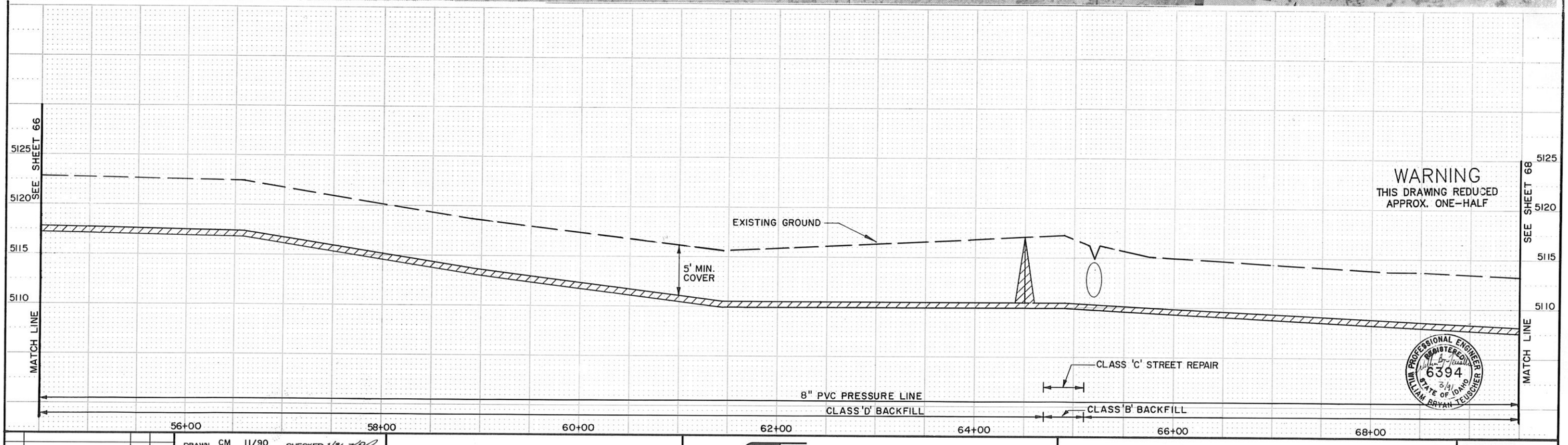

NO.	REVISIONS	BY	DATE

DRAWN CM 11/90 DATE — CHECKED DATE

DESIGNED 3/91 DATE — PROJECT ENGINEER

APPROVED 3/91 DATE — PROJECT MANAGER

CITY OF BELLEVUE,
IDAHO

FORSGREN ASSOCIATES / P.A.

WASTEWATER COLLECTION AND TREATMENT FACILITIES

PRESSURE LINE

PROJECT NO. 89067

SHEET NO. 67

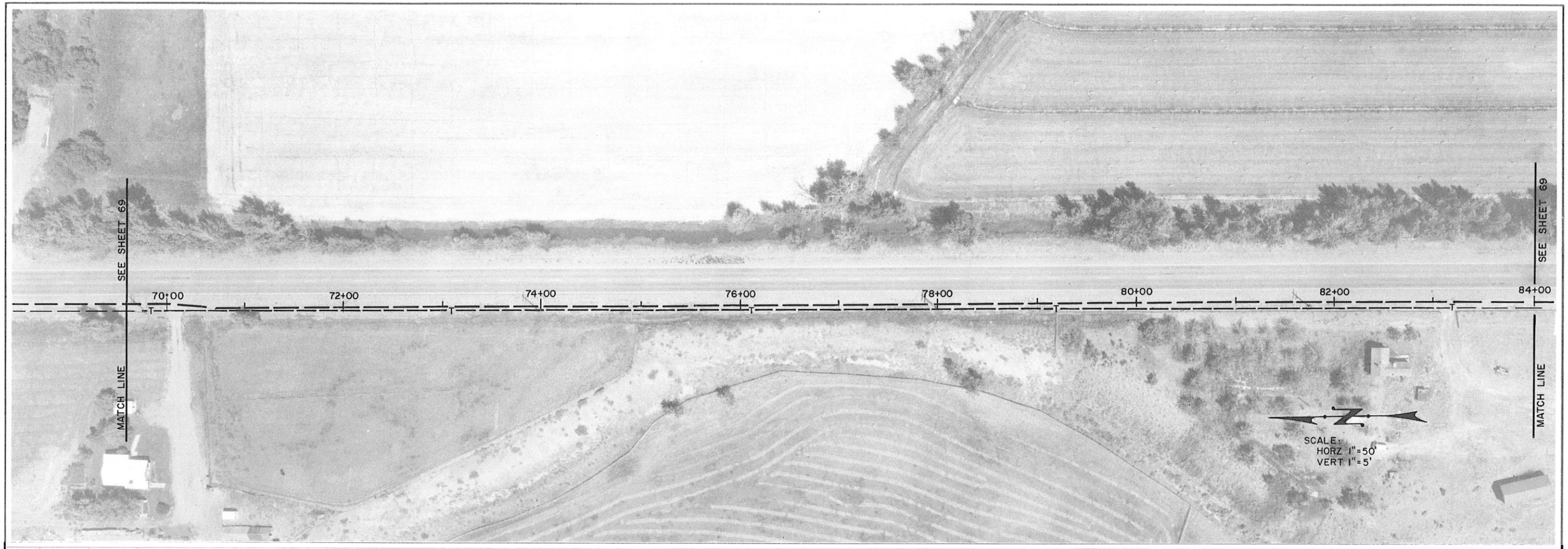

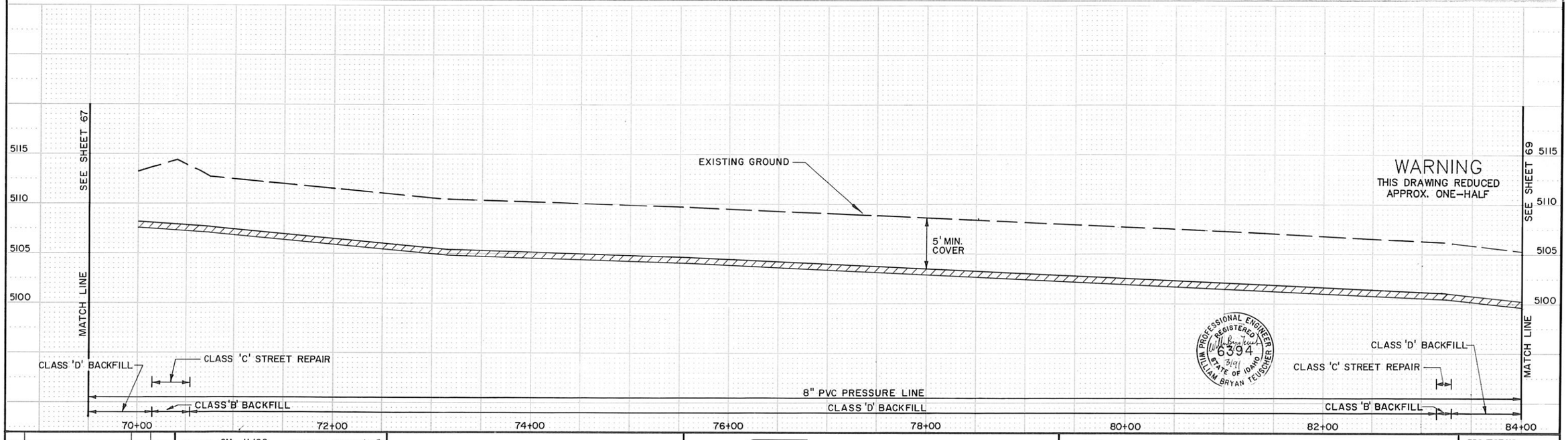

PROFESSIONAL ENGINEER
REGISTERED
6394
3/9/91
STATE OF IDAHO
WILLIAM BRYAN TEUSCHER

NO.	REVISIONS	BY	DATE

DRAWN CM 11/90 DATE — CHECKED 3/91 DATE

DESIGNED 3/91 DATE — PROJECT ENGINEER

APPROVED 3/91 DATE — PROJECT MANAGER

CITY OF BELLEVUE,
IDAHO

FORSGREN
ASSOCIATES / P.A.

WASTEWATER COLLECTION AND TREATMENT FACILITIES

PRESSURE LINE

PROJECT NO. 89067

SHEET NO. 68

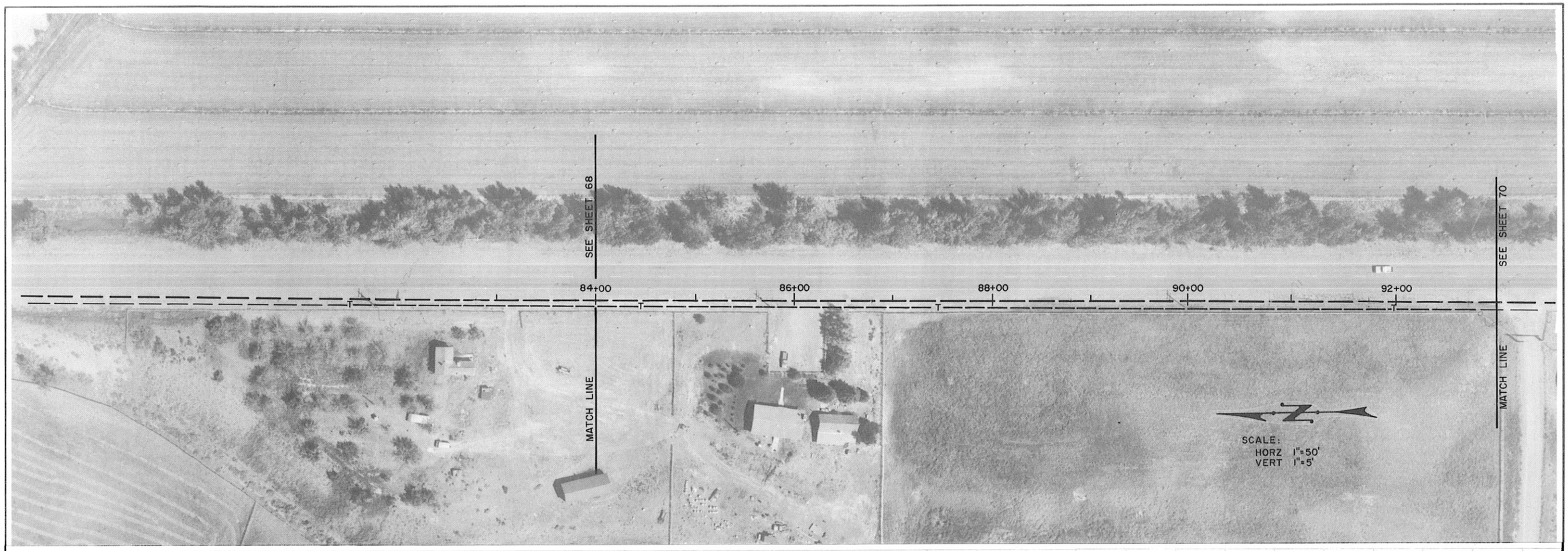

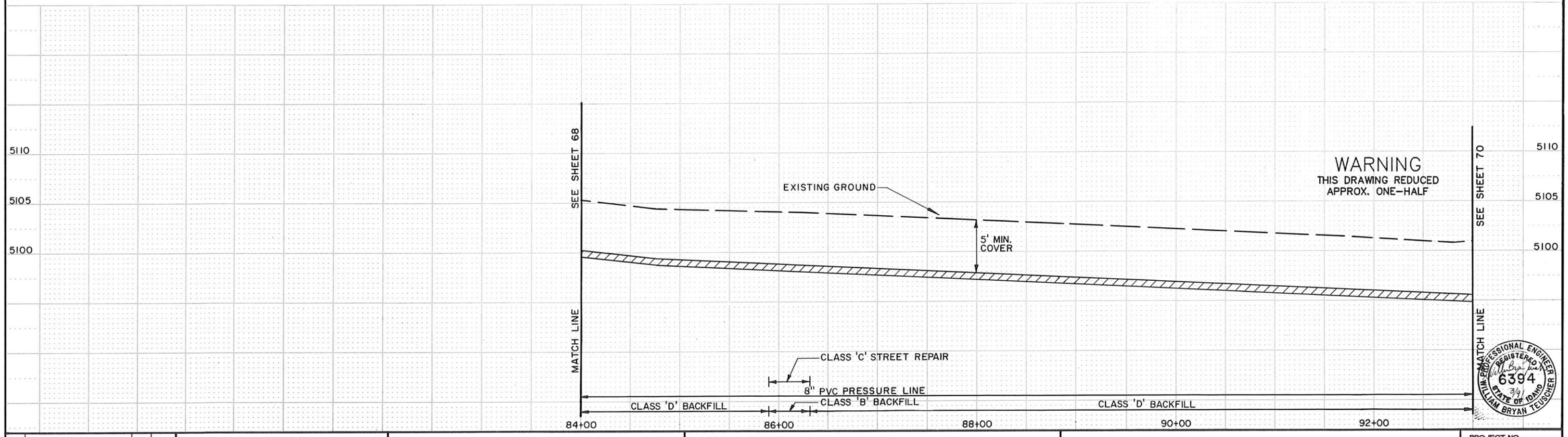

NO.	REVISIONS	BY	DATE

DRAWN CM 11/90 DATE CHECKED 2/91 DATE

DESIGNED 3/91 DATE PROJECT ENGINEER

APPROVED 3-91 DATE PROJECT MANAGER

CITY OF BELLEVUE,
IDAHO

FORSGREN
ASSOCIATES / P.A.

WASTEWATER COLLECTION AND TREATMENT FACILITIES

PRESSURE LINE

PROJECT NO. 89067

SHEET NO. 69

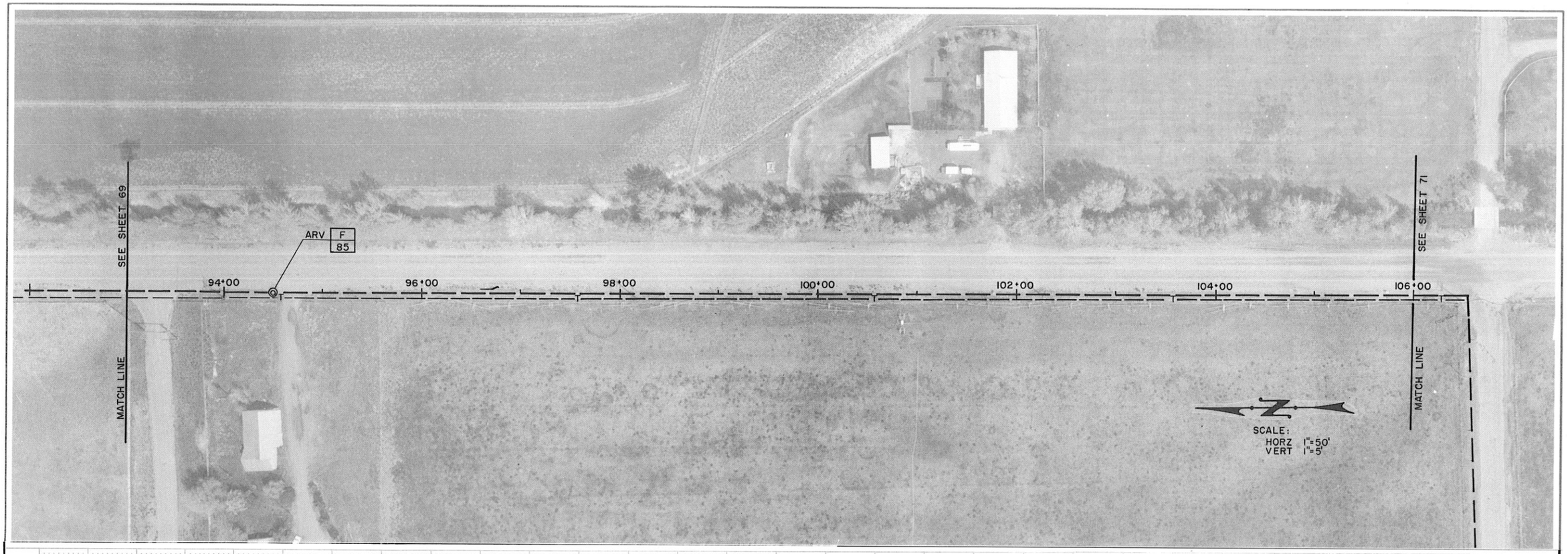

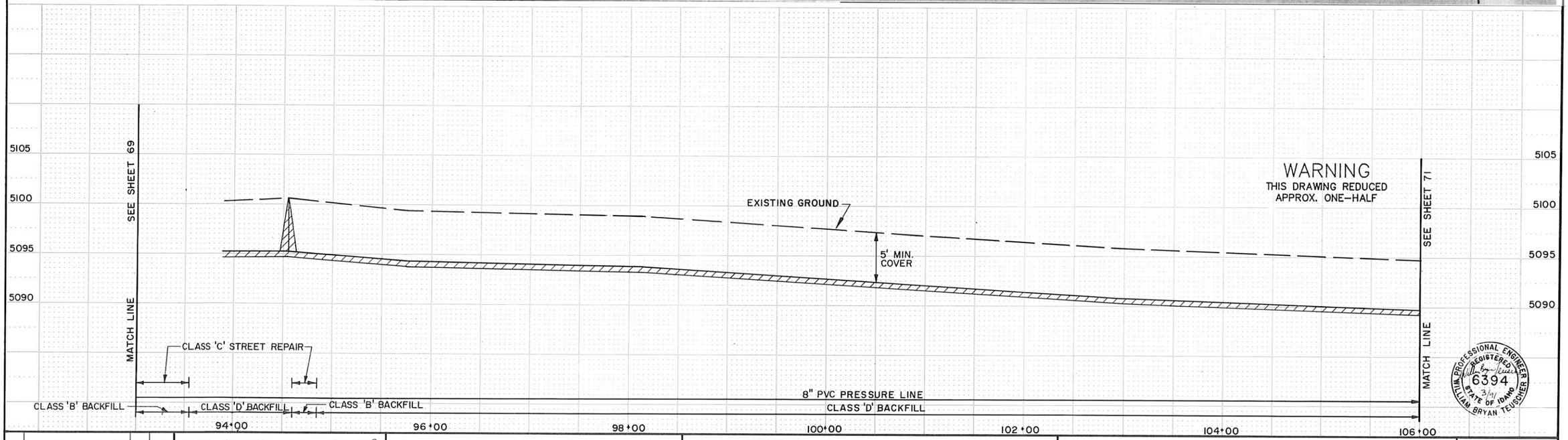

NO.	REVISIONS	BY	DATE

DRAWN CM 11/90 DATE CHECKED 3/91 DATE

DESIGNED 3/91 DATE William Bryan Teuscher PROJECT ENGINEER

APPROVED 3/91 DATE J. W. Miller PROJECT MANAGER

CITY OF BELLEVUE, IDAHO

FORSGREN ASSOCIATES / P.A.

WASTEWATER COLLECTION AND TREATMENT FACILITIES

PRESSURE LINE

PROJECT NO. 89067

SHEET NO. 70

WILLIAM BRYAN TEUSCHER REGISTERED PROFESSIONAL ENGINEER 6394 STATE OF IDAHO 3/91

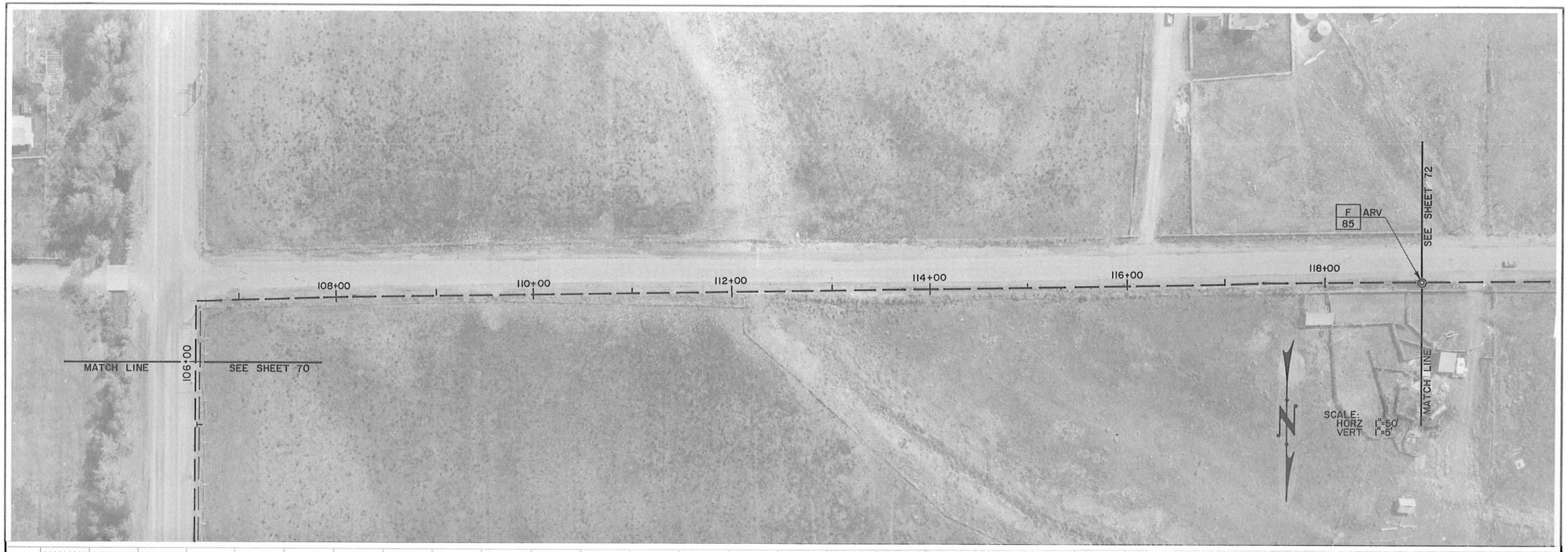

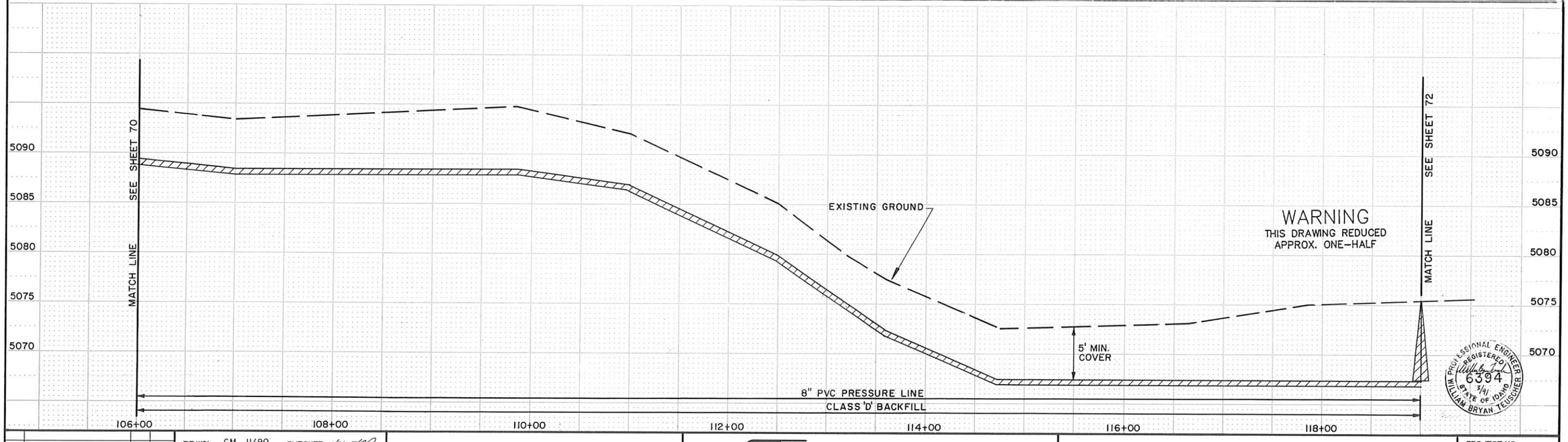

NO.	REVISIONS	BY	DATE

DRAWN CM 11/90 DATE — CHECKED 3/91 DATE

DESIGNED 3/91 DATE — PROJECT ENGINEER

APPROVED 3/91 DATE — PROJECT MANAGER

CITY OF BELLEVUE,
IDAHO

FORSGREN ASSOCIATES / P.A.

WASTEWATER COLLECTION AND TREATMENT FACILITIES

PRESSURE LINE

PROJECT NO. 89067

SHEET NO. 71

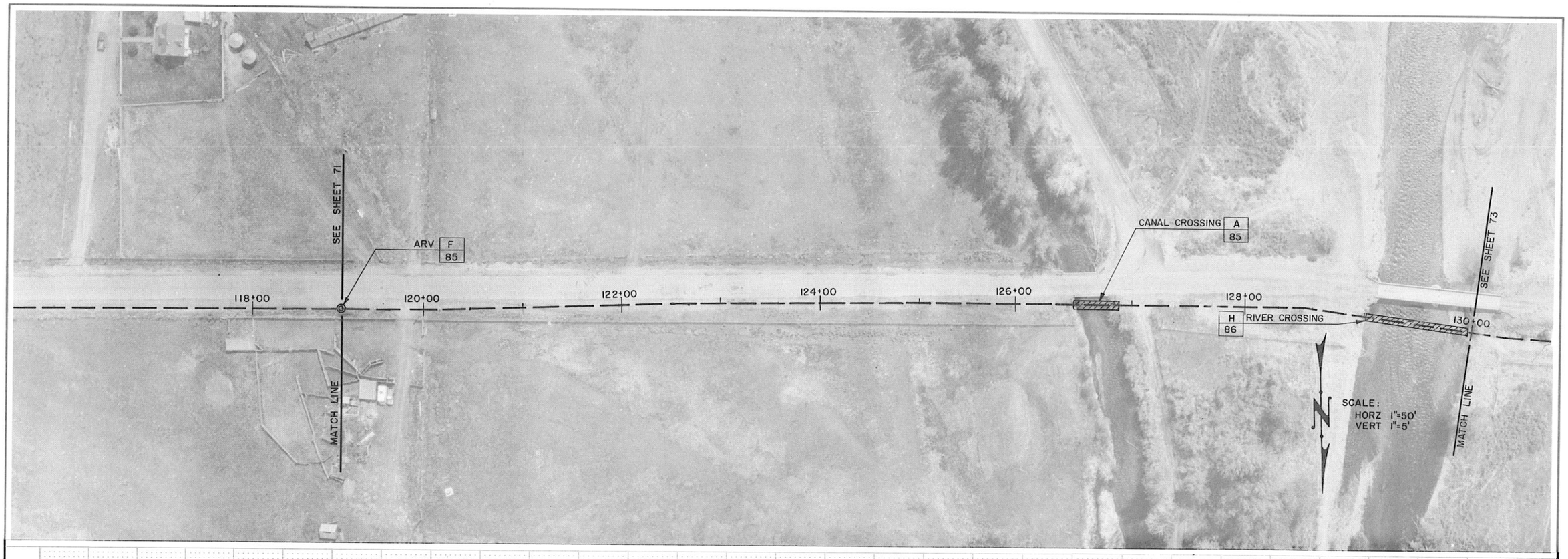

WARNING
THIS DRAWING REDUCED
APPROX. ONE-HALF

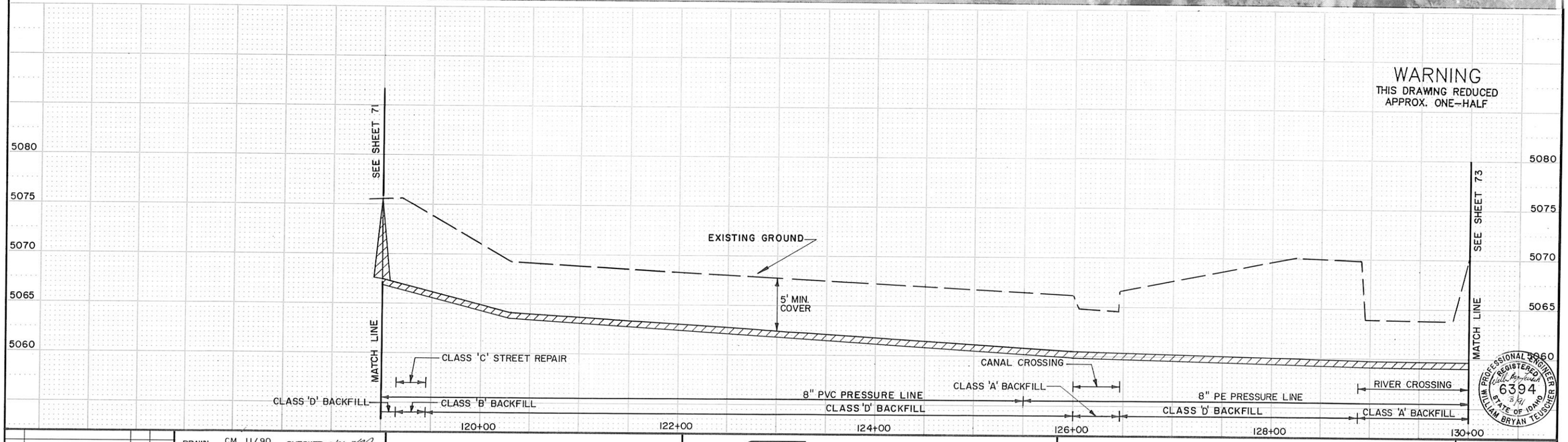

NO.	REVISIONS	BY	DATE

DRAWN CM 11/90 DATE — CHECKED DATE

DESIGNED 3/91 DATE — PROJECT ENGINEER

APPROVED 3/91 DATE — PROJECT MANAGER

CITY OF BELLEVUE,
IDAHO

FORSGREN ASSOCIATES / P.A.

WASTEWATER COLLECTION AND TREATMENT FACILITIES

PRESSURE LINE

PROJECT NO. 89067

SHEET NO. 72

REGISTERED PROFESSIONAL ENGINEER
6394
3/91
STATE OF IDAHO
WILLIAM BRYAN TEUSCHER

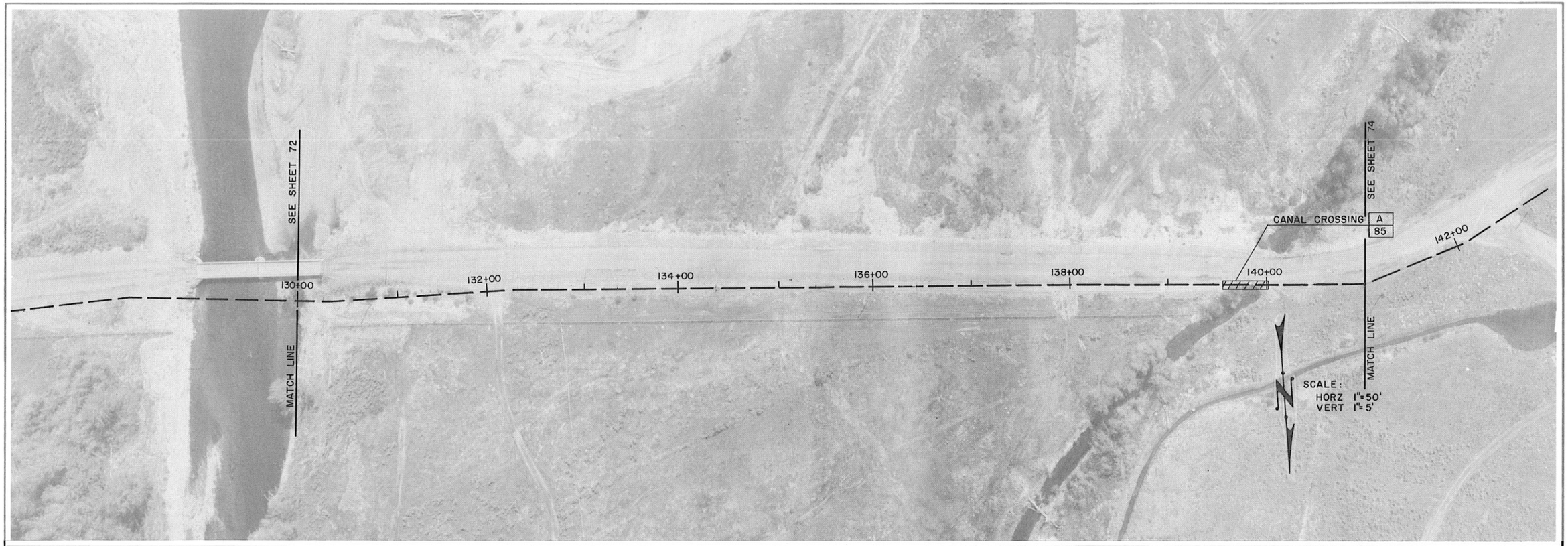

WARNING
THIS DRAWING REDUCED
APPROX. ONE-HALF

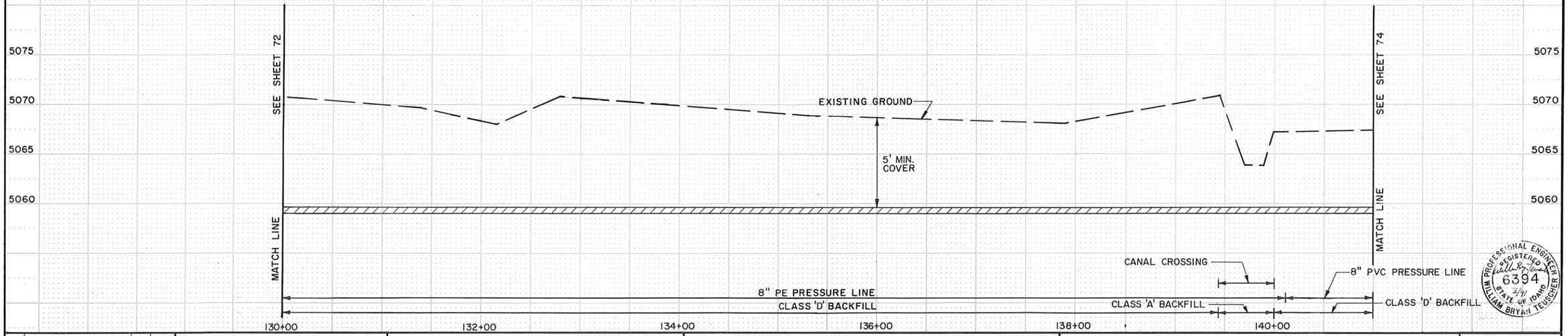

PROFESSIONAL ENGINEER
REGISTERED
6394
2/91
STATE OF IDAHO
WILLIAM BRYAN TEUSCHER

NO.	REVISIONS	BY	DATE

DRAWN CM 11/90 DATE CHECKED 2/91 DATE
DESIGNED 3/91 DATE PROJECT ENGINEER
APPROVED 3/91 DATE PROJECT MANAGER

CITY OF BELLEVUE,
IDAHO

FORSGREN
ASSOCIATES / P.A.

WASTEWATER COLLECTION AND TREATMENT FACILITIES

PRESSURE LINE

PROJECT NO. 89067

SHEET NO. 73

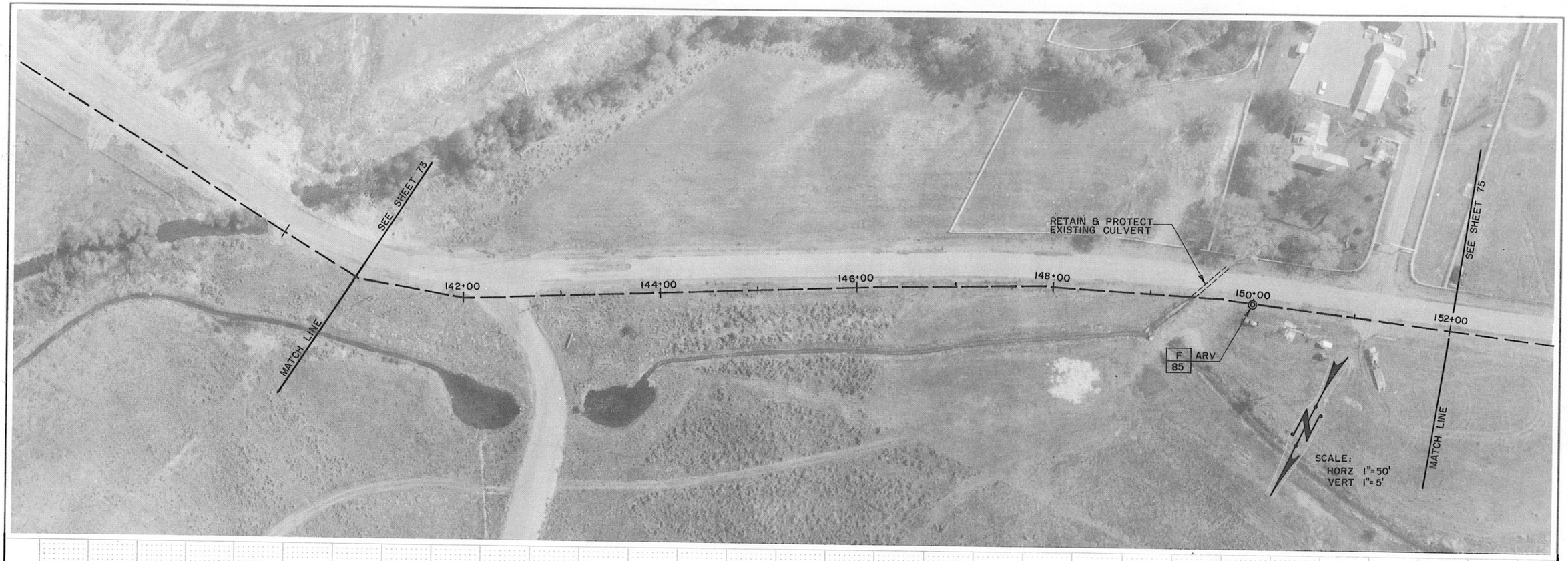

WARNING
THIS DRAWING REDUCED
APPROX. ONE-HALF

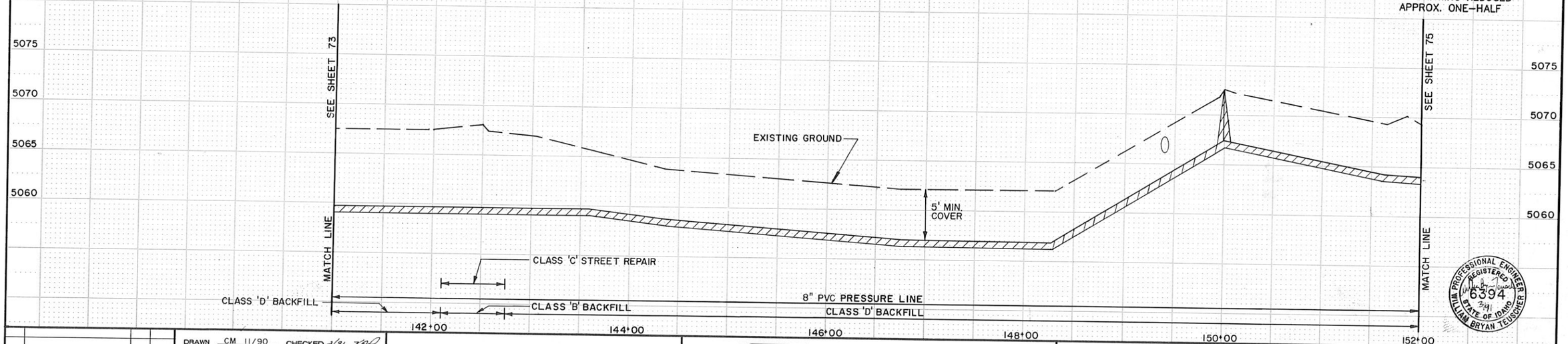

WILLIAM BRYAN TEUSCHER
REGISTERED PROFESSIONAL ENGINEER
6394
STATE OF IDAHO
3/91

NO.	REVISIONS	BY	DATE

DRAWN CM 11/90 DATE — CHECKED 3/91 DATE
DESIGNED 3/91 DATE — PROJECT ENGINEER
APPROVED 3/91 DATE — PROJECT MANAGER

CITY OF BELLEVUE,
IDAHO

FORSGREN ASSOCIATES / P.A.

WASTEWATER COLLECTION AND TREATMENT FACILITIES

PRESSURE LINE

PROJECT NO. 89067

SHEET NO. 74

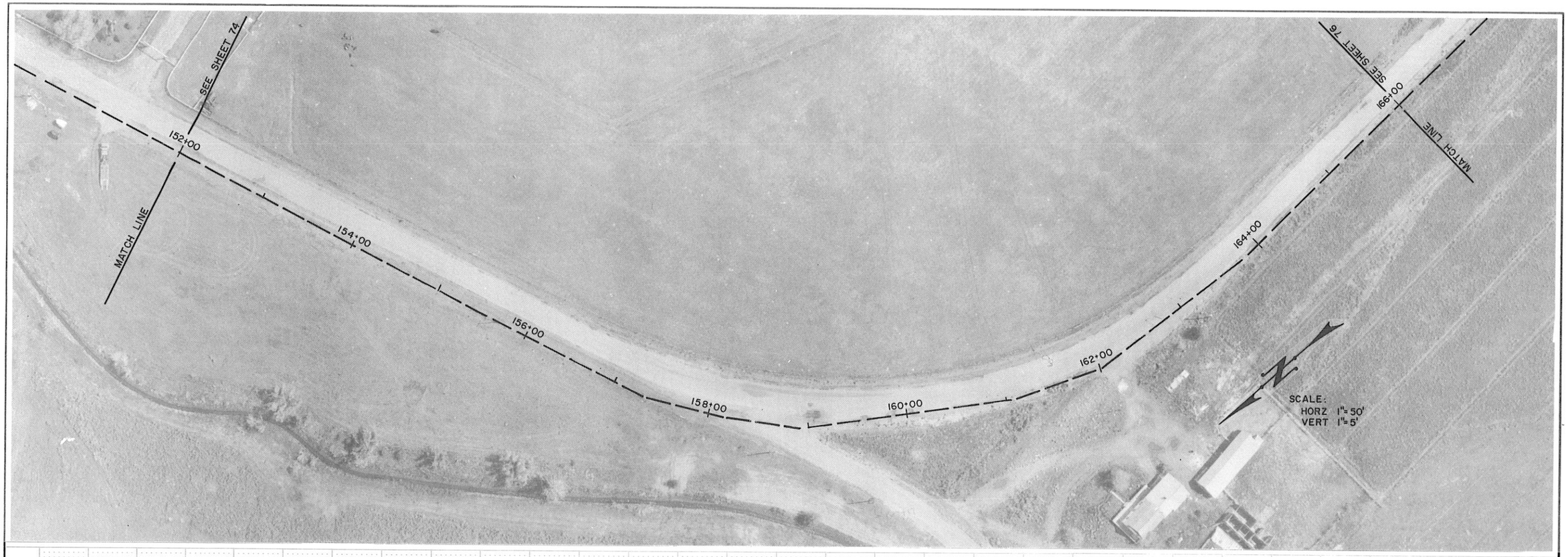

WARNING
THIS DRAWING REDUCED
APPROX. ONE-HALF

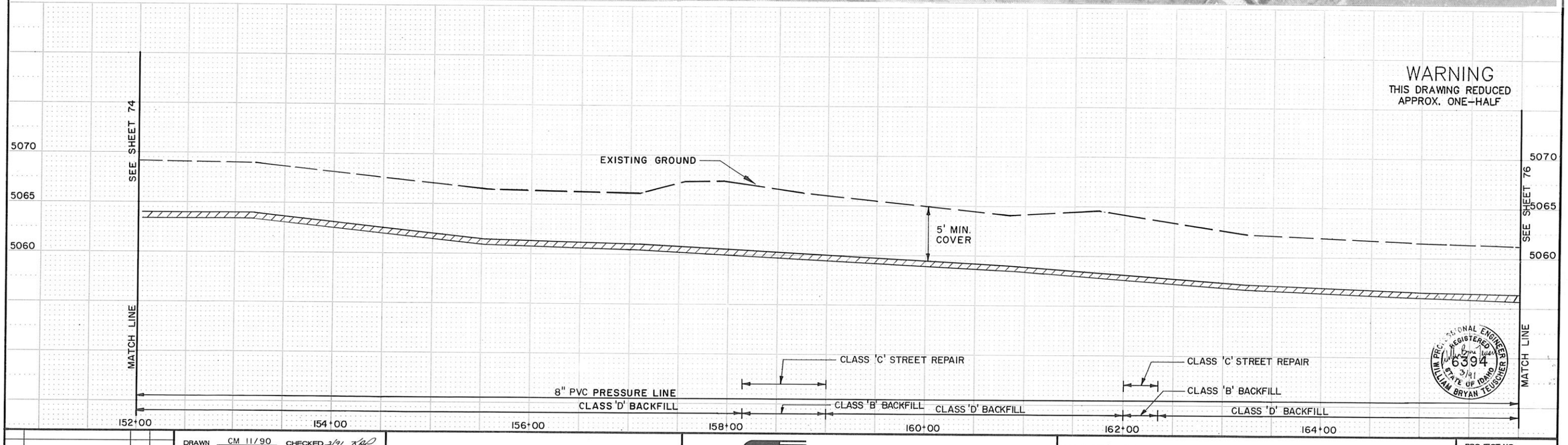

WILLIAM BRYAN TEUSCHER
PROFESSIONAL ENGINEER
REGISTERED
6394
3/91
STATE OF IDAHO

NO.	REVISIONS	BY	DATE

DRAWN CM 11/90 DATE CHECKED 3/91 DATE
DESIGNED 3/91 DATE PROJECT ENGINEER
APPROVED 3/91 DATE PROJECT MANAGER

CITY OF BELLEVUE,
IDAHO

FORSGREN ASSOCIATES / P.A.

WASTEWATER COLLECTION AND TREATMENT FACILITIES

PRESSURE LINE

PROJECT NO. 89067

SHEET NO. 75



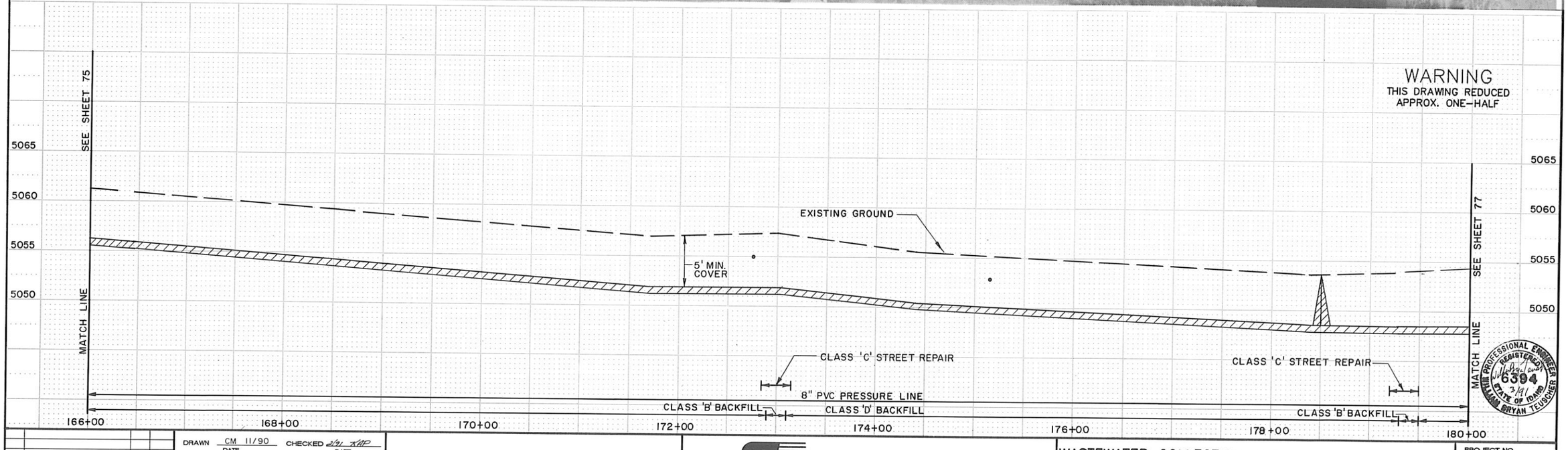

NO.	REVISIONS	BY	DATE

DRAWN CM 11/90 DATE CHECKED 3/91 DATE

DESIGNED 3/91 DATE PROJECT ENGINEER

APPROVED 3/91 DATE PROJECT MANAGER

CITY OF BELLEVUE,
IDAHO

FORSGREN
ASSOCIATES / P.A.

WASTEWATER COLLECTION AND TREATMENT FACILITIES

PRESSURE LINE

PROJECT NO. 89067

SHEET NO. 76

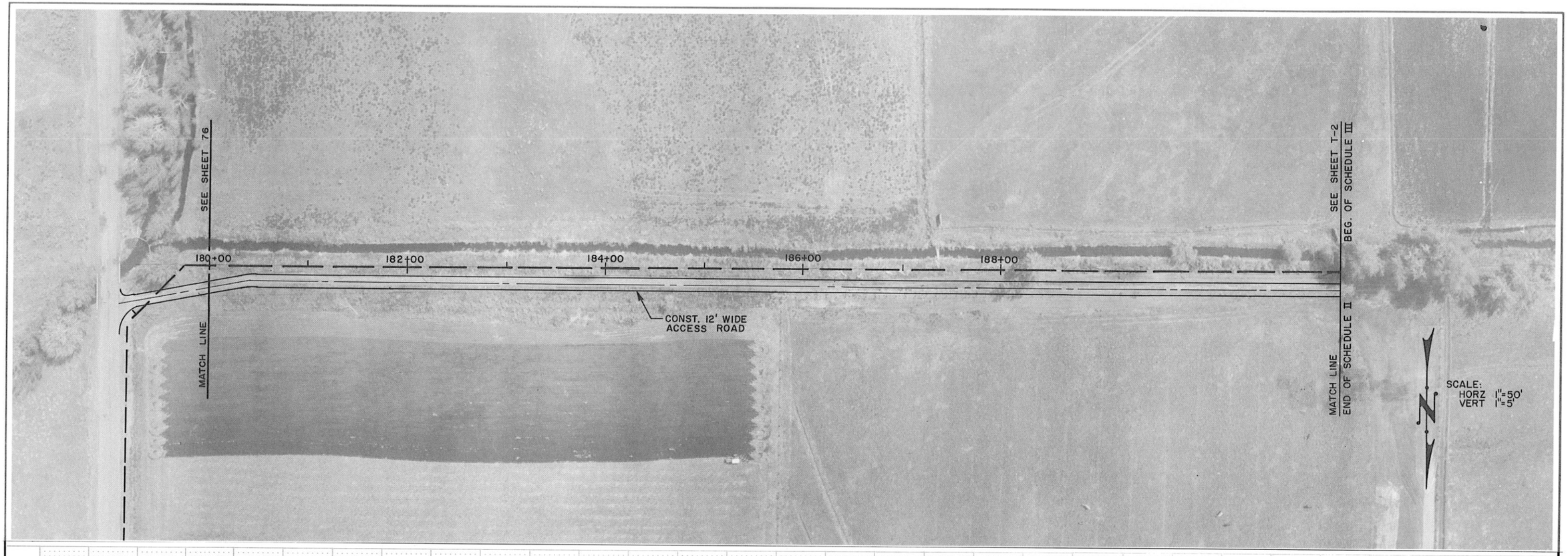

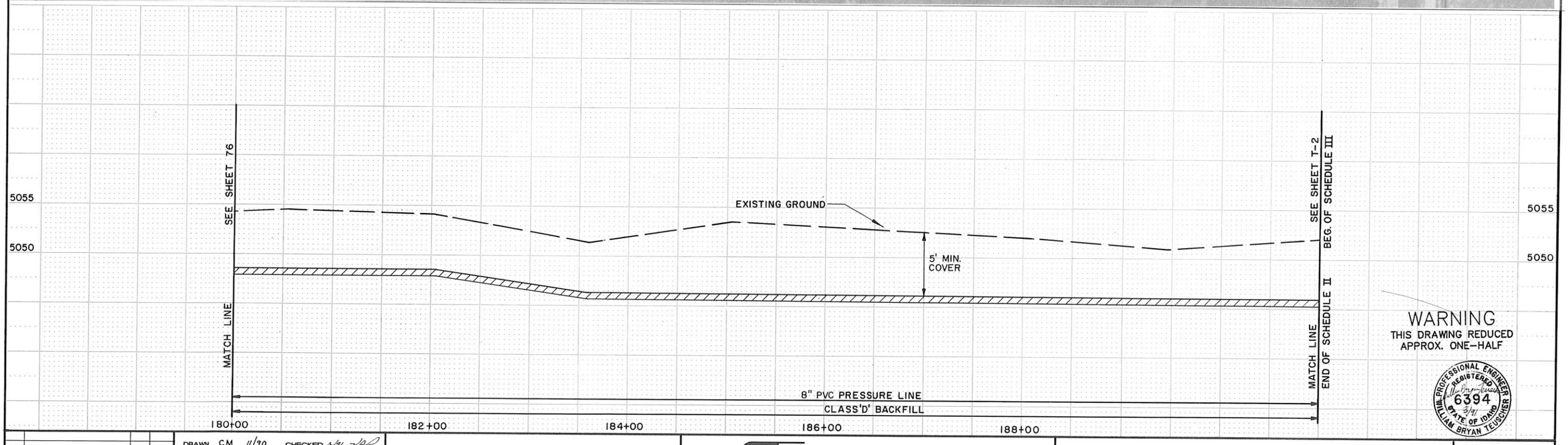

WARNING
THIS DRAWING REDUCED APPROX. ONE-HALF

PROFESSIONAL ENGINEER REGISTERED 6394 STATE OF IDAHO 3/91 WILLIAM BRYAN TEUSCHER

NO.	REVISIONS	BY	DATE

DRAWN C.M. 11/90 DATE — CHECKED 3/91 DATE

DESIGNED 3/91 DATE — PROJECT ENGINEER

APPROVED 3/91 DATE — PROJECT MANAGER

CITY OF BELLEVUE, IDAHO

FORSGREN ASSOCIATES / P.A.

WASTEWATER COLLECTION AND TREATMENT FACILITIES

PRESSURE LINE

PROJECT NO. 89067

SHEET NO. 77

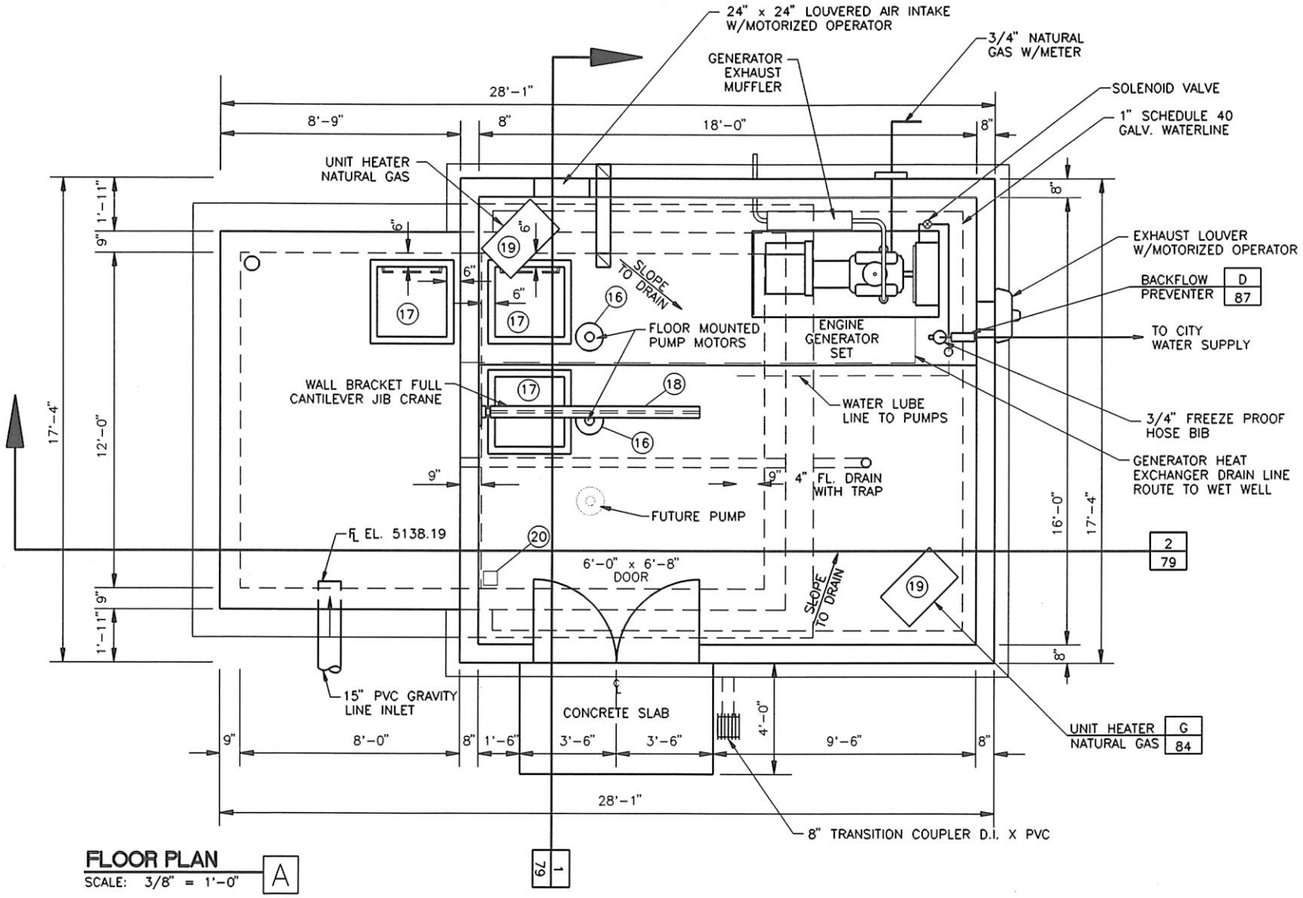

FLOOR PLAN
SCALE: 3/8" = 1'-0" A

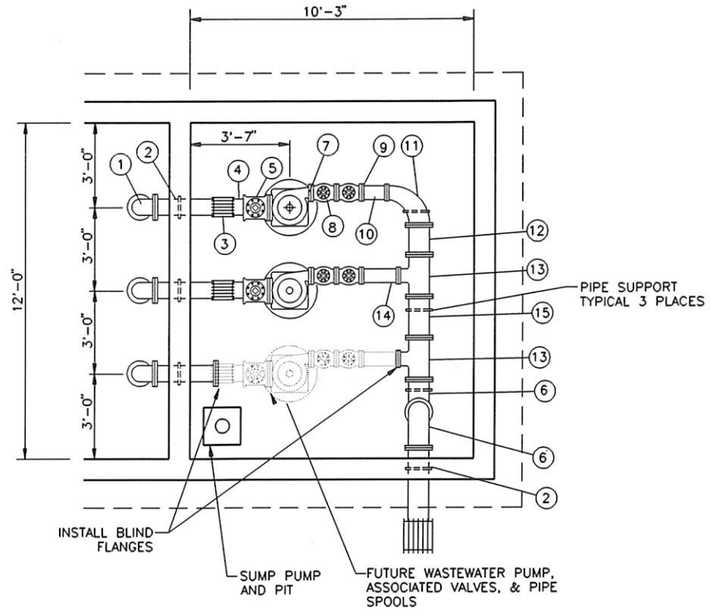

DRY WELL FLOOR PLAN B
SCALE: 3/8" = 1'-0"

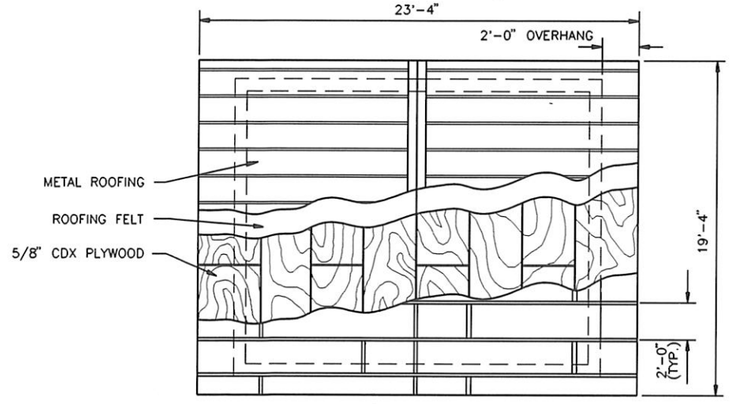

ROOF FRAMING PLAN C
NOT TO SCALE

PUMP STATION DESIGN

PARAMETER	VALUE
MAX. H.P.	5
PUMP CAPACITY (GPM)	550
TOTAL HEAD (FT.)	21.5
MIN. SHUTOFF HEAD (FT.)	40
MAX. RPM	1155
ELECTRICAL CHARACTERISTICS (ø/V/Hz)	3 PHASE/480/60HZ
MIN. SPHERE (IN.)	3

FOR PUMP PERFORMANCE CURVE SEE DETAIL
WASTEWATER PUMP CURVE D 84

PROFESSIONAL ENGINEER REGISTERED 6394 STATE OF IDAHO WILLIAM BRYAN TEUSCHER 3/91

WARNING
THIS DRAWING REDUCED APPROX. ONE-HALF

WASTEWATER EQUIPMENT/MATERIALS SCHEDULE

NO.	ITEM DESCRIPTION	NO.	ITEM DESCRIPTION
1	6" FLANGE x FLARED 90° ELBOW	17	30"X30" ACCESS HATCH FOR DEEP WELLS (3 EA.)
2	6" FLANGED WALL SLEEVE WITH SEAL RING	18	WALL MOUNT FULL CANTILEVER JIB CRANE & HOIST
3	6" FLANGED FLEXIBLE COUPLING	19	NATURAL GAS UNIT HEATER (2 EA.)
4	6" SPOOL FLANGED PIPE SPOOL AS REQUIRED	20	SUMP PUMP
5	6" FLANGED ECCENTRIC PLUG VALVE	21	100 CFM EXHAUST FAN AND DUCTING
6	8" FLANGED L.R. 90° BEND	22	AIR BUBBLER TUBING
7	DRY MOUNT WASTEWATER PUMP W/ STAND	23	SUMP PUMP DISCHARGE LINE – 1" GALVANIZED
8	4" BALL CHECK VALVE	24	SHAFT BRACING AND CARRIER BEARING SUPPORT
9	4" ECCENTRIC PLUG VALVE	25	WALL MOUNT PIPE SUPPORT
10	4" SPOOL FLANGED x PE W/ FLANGED COUPLING ADAPTER & RESTRAINING RODS	26	PUMP DRIVE SHAFT
11	4 X 8 FLANGED L.R. 90° REDUCING ELBOW	27	HOT DIPPED GALVANIZED LADDER (2 EA)
12	6" SPOOL FLANGED X PE W/FLG COUP. ADAPT. & RESTRAINING RODS	28	
13	8" X 8" X 4" FLANGED TEE.	29	
14	4" SPOOL FLANGED X PE W/ FLANGED COUPLING ADAPTER AND RESTRAINING RODS	30	
15	8" SPOOL FLANGED X P.E. W/ FLANGED COUPLING ADAPTER AND RESTRAINING RODS	31	
16	3 PHASE, 480 v 15 HP ELECTRIC MOTORS WITH MOUNTING STANDS FOR WASTEWATER PUMPS	32	

NO.	REVISIONS	BY	DATE

DRAWN RSS 1/91 DATE CHECKED 3/91 DATE
DESIGNED 3/91 DATE PROJECT ENGINEER
APPROVED 3/91 DATE PROJECT MANAGER

BELFLR3

CITY OF BELLEVUE, IDAHO

FORSGREN ASSOCIATES / P.A.

WASTEWATER & COLLECTION TREATMENT FACILITIES

LIFT STATION NO. 1 BUILDING

PROJECT NO. 89067

SHEET NO. 78

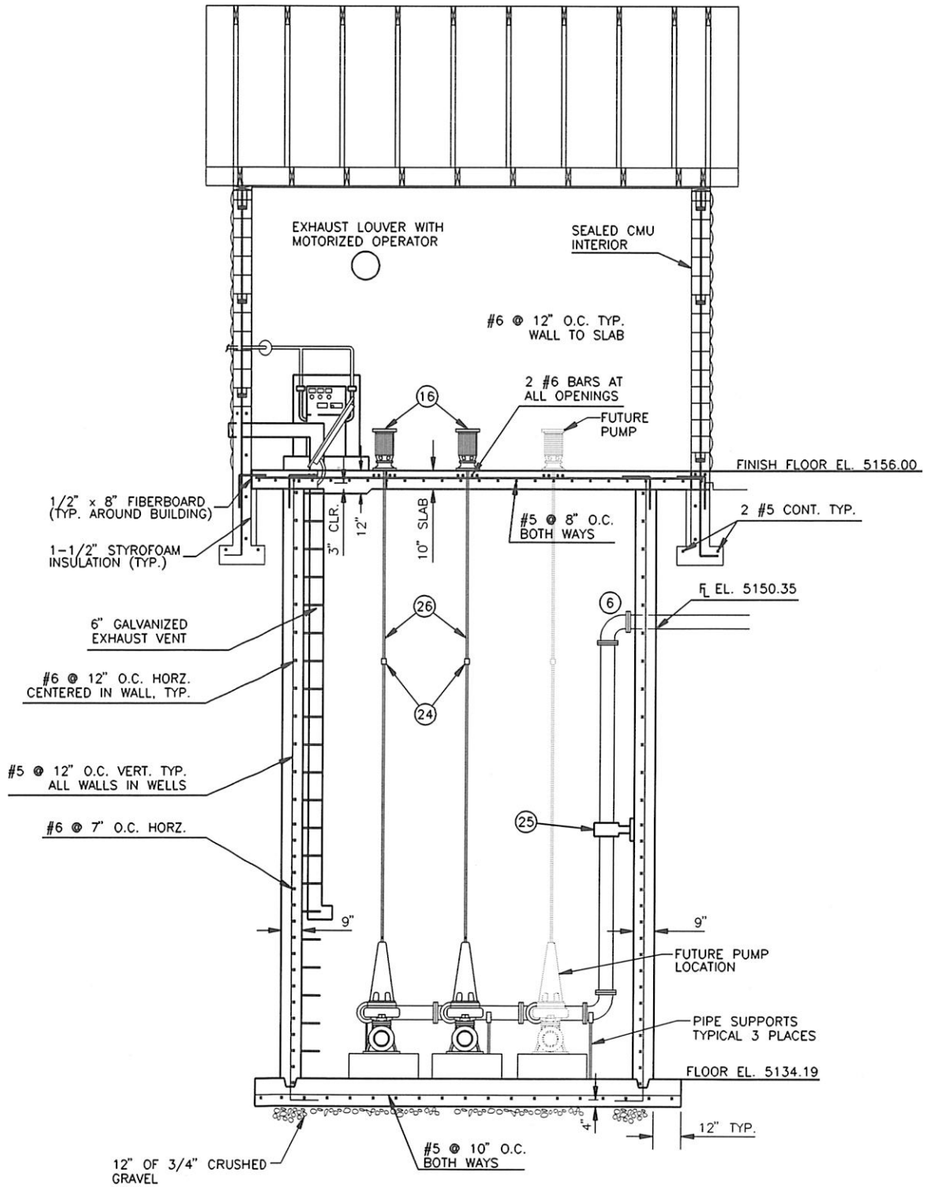

SECTION 1
SCALE: 3/8" = 1'-0"

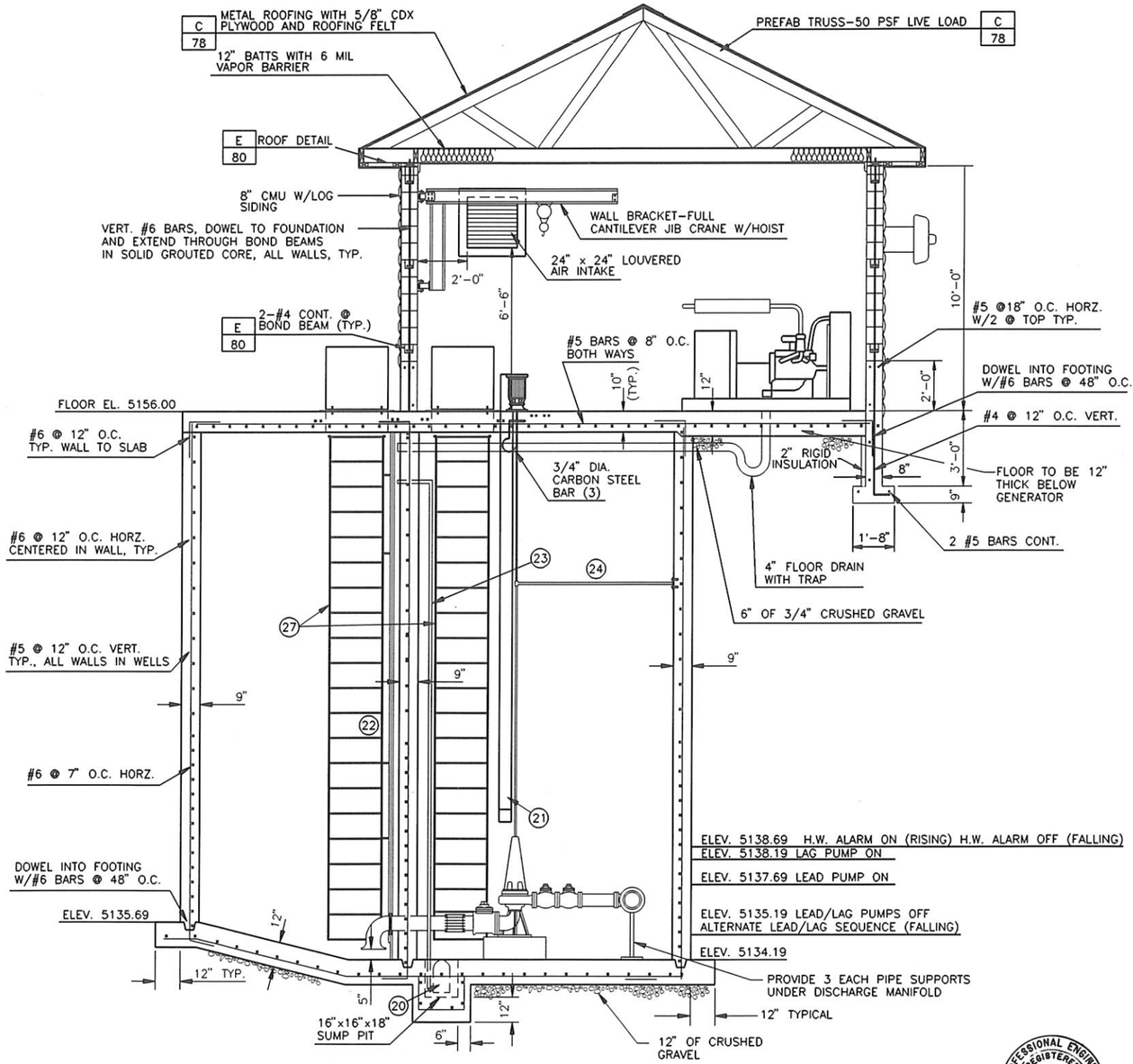

SECTION 2
SCALE: 3/8" = 1'-0"

WARNING
THIS DRAWING REDUCED APPROX. ONE-HALF

WILLIAM BRYAN TEUSCHER REGISTERED PROFESSIONAL ENGINEER 6394 STATE OF IDAHO 3/9/91

NO.	REVISIONS	BY	DATE

DRAWN RSS 3/91 DATE CHECKED 3/91 DATE
DESIGNED 3/91 DATE PROJECT ENGINEER
APPROVED 3/9/91 DATE PROJECT MANAGER

CITY OF BELLEVUE, IDAHO

FORSGREN ASSOCIATES / P.A.

WASTEWATER & COLLECTION TREATMENT FACILITITES

LIFT STATION NO. 1 BUILDING

PROJECT NO. 89067

SHEET NO. 79

BELF1.R5

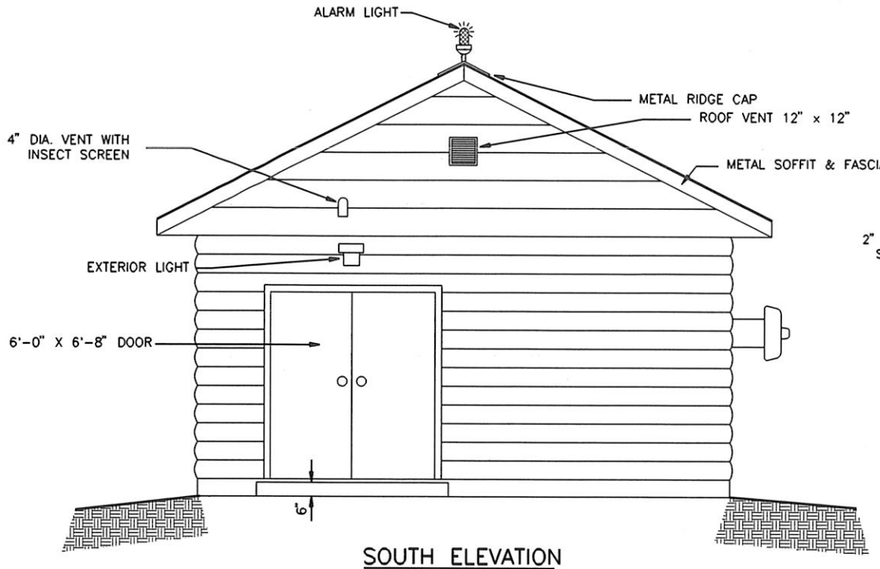

SOUTH ELEVATION
SCALE: 3/8" = 1'-0"

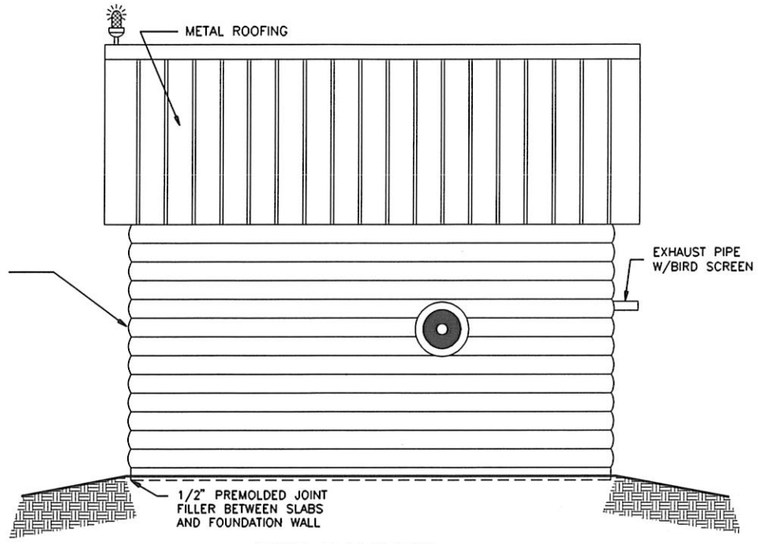

EAST ELEVATION
SCALE: 3/8" = 1'-0"

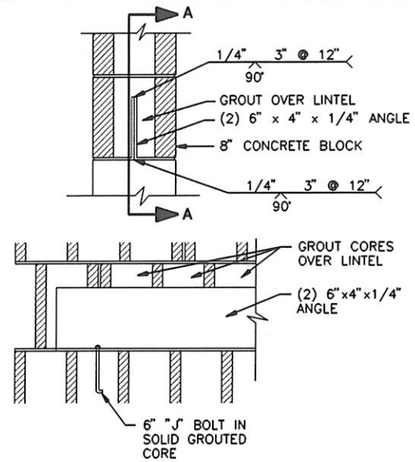

SECTION A-A

LINTEL DETAIL A
SCALE: 3/16" = 1"

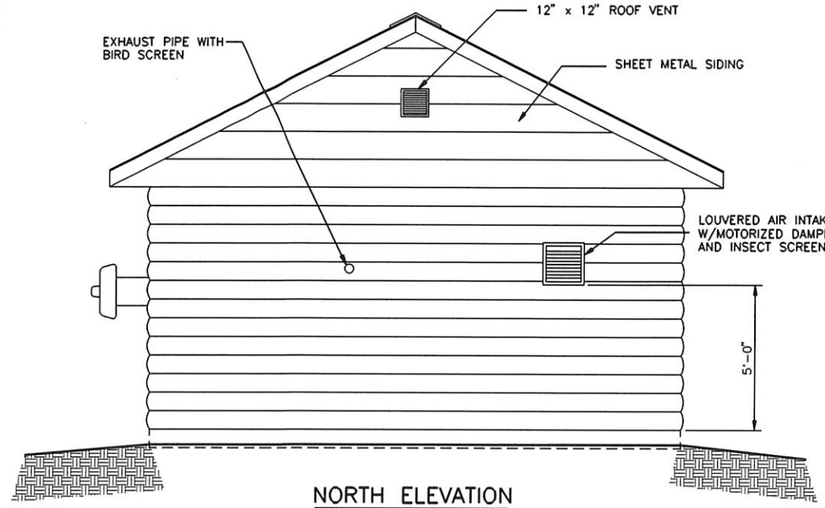

NORTH ELEVATION
SCALE: 3/8" = 1'-0"

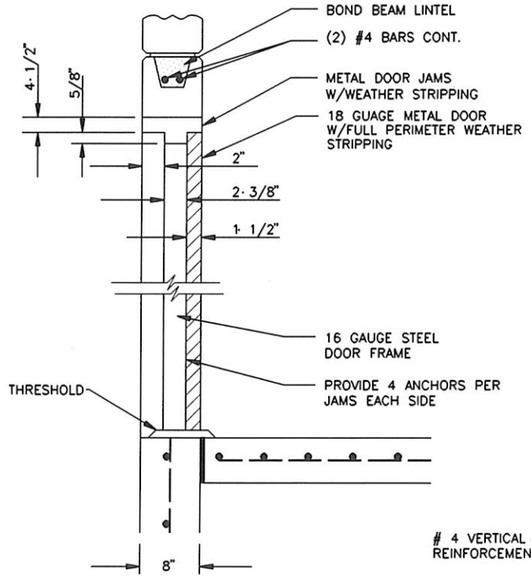

DOOR DETAIL D
NOT TO SCALE

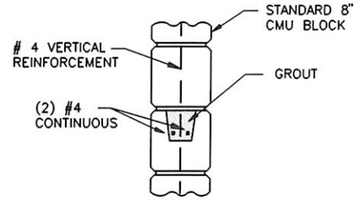

BOND BEAM DETAIL E
NOT TO SCALE

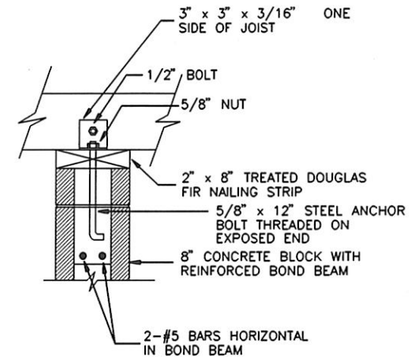

ROOF CONNECTION C
NOT TO SCALE

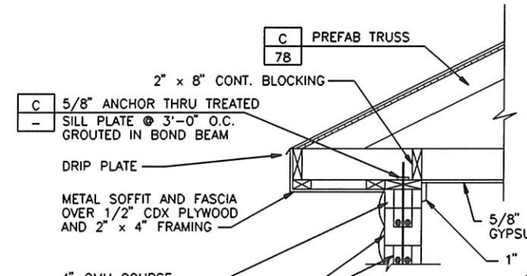

ROOF DETAIL F
SCALE: 3/4" = 1'-0"

WARNING
THIS DRAWING REDUCED APPROX. ONE-HALF

PROFESSIONAL ENGINEER REGISTERED 6394 STATE OF IDAHO WILLIAM BRYAN TEUSCHER

NO.	REVISIONS	BY	DATE

DRAWN 1/91 RSS DATE CHECKED 3/91 DATE
DESIGNED 3/91 DATE PROJECT ENGINEER
APPROVED 3/91 DATE PROJECT MANAGER

CITY OF BELLEVUE, IDAHO

FORSGREN ASSOCIATES / P.A.

WASTEWATER COLLECTION AND TREATMENT FACILITIES

LIFT STATION NO. 1 BUILDING

PROJECT NO. 89067

SHEET NO. 80

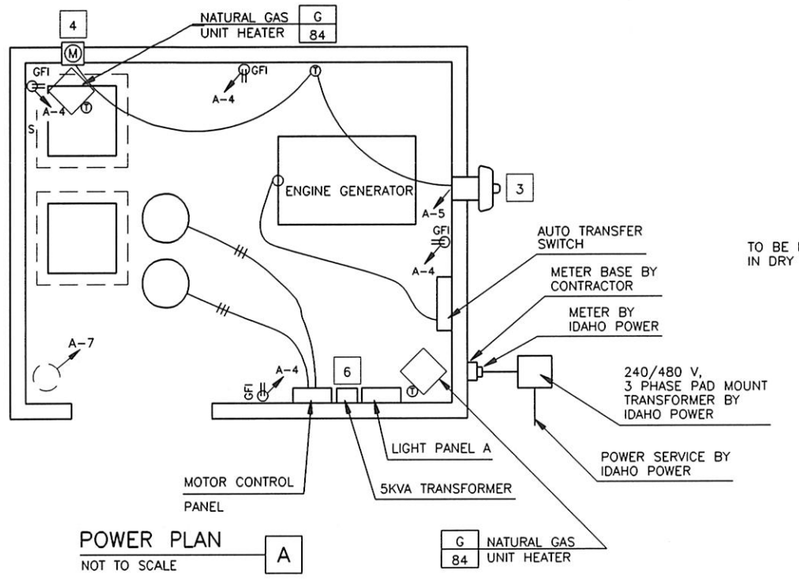

POWER PLAN
NOT TO SCALE
A

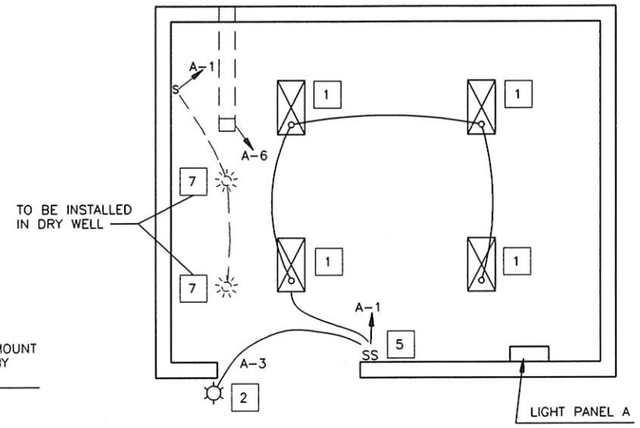

LIGHTING PLAN
NOT TO SCALE
B

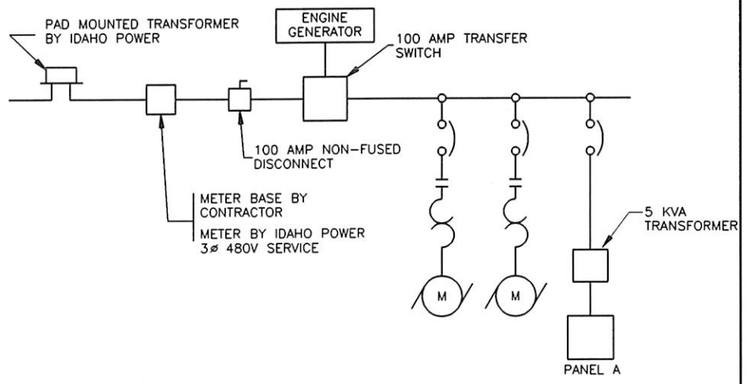

ONE LINE POWER DIAGRAM
NOT TO SCALE
C

ELECTRICAL SYMBOLS

- CEILING FIXTURE
- WALL FIXTURE
- FLOURESCENT FIXTURE
- S — SINGLE POLE SWITCH
- GFI — GROUND FAULT INTERRUPTER OUTLET
- GFI WP — WEATHER PROOF GROUND FAULT INTERUPTER OUTLET
- M — MOTOR
- T — THERMOSTAT

ELECTRICAL EQUIPMENT SCHEDULE

ITEM	QTY	DESCRIPTION
1 LIGHT FIXTURE	4	LITHONIA DM-240-120 V W/2 EACH F40 CW LAMPS
2 LIGHT FIXTURE	1	MANVILLE HOLOPHANE, WALLPACK II, 120 V W/100 W MERCURY LAMP PHOTOELECTRIC SWITCH
3 EXHAUST MOTOR LOUVER	1	DOMEX-EXHAUSTER OPERATED LOUVER WITH WALL MOUNTED THERMOSTAT AND DAMPER WITH WEATHER SEALS.
4 INTAKE MOTOR LOUVER	1	LOUVERED AIR INTAKE W/MOTORIZED OPERATOR WALL MOUNTED THERMOSTAT.
5 LIGHT SWITCH	2	SP LIGHTED HANDLE HUBBELL 3031-IL WITH BOX & COVER OR APPROVED EQUAL.
6	1	5KVA TRANSFORMER HUBBEL OR EQUAL.
GFI CONVENIENCE OUTLET	3	20 AMP DUPLEX GROUND FAULT INTERRUPTER HUBBELL GF-53621 W/BOX AND P-26 COVER.
7	2	PORCELAIN LIGHT SOCKET WITH 100 WATT LIGHT BULB IN DRY PIT

PANEL SCHEDULE

PANEL A — TYPE HQOB — 1 ø 3 — WIRE 120/240 VOLTS

MOUNTING: ☐ flush ☒ surface

REMARKS: LOCATED IN LIFT STATION BUILDING

LOCATION LIFT STATION #1 BUILDING — 100 amp, main — ☐ lugs ☒ breaker

CIR. NO.	BREAKER amp	BREAKER pole	NO. OUTLETS lt's	NO. OUTLETS c.o.	NO. OUTLETS misc.	LOAD A	LOAD B	WIRE SIZE	CIRCUIT DESCRIPTION
1	20		4			940		12	LIGHTS
2	15				1	240		12	BATTERY CHARGER
3	15		1				100	12	LIGHTS
4	20			4			960	12	OUTLETS
5	15				1	300		12	EXHAUST FAN & OPERATOR
6	15				1	450		12	DRY PIT-EXHAUST FAN
7	20				1		800	12	SUMP PUMP
8									SPARE
9									SPARE
10									SPARE
11									SPARE
12									SPARE

TOTALS 1930 1860

AMPS/PHASE 16.1 15.5

AIC 10,000

FEEDER WIRE SIZE 3 — INSUL. THW — CONDUIT SIZE 3/4" — PARALLEL RUNS 1

WARNING
THIS DRAWING REDUCED
APPROX. ONE-HALF

WILLIAM BRYAN TEUSCHER — REGISTERED PROFESSIONAL ENGINEER — 6394 — STATE OF IDAHO — 4/1/91

NO.	REVISIONS	BY	DATE

DRAWN RSS 1/91 DATE — CHECKED DATE
DESIGNED 4/1 DATE — PROJECT ENGINEER
APPROVED 4/1/91 DATE — PROJECT MANAGER

CITY OF BELLEVUE,
IDAHO

FORSGREN ASSOCIATES / P.A.

WASTEWATER COLLECTION & TREATMENT FACIL.

LIFT STATION NO. 1 ELECTRICAL NOTES

PROJECT NO. 89067

SHEET NO. 81

SHEELEC4

PUMP STATION DESIGN

PARAMETER	VALUE
MAX. H.P.	4.0
PUMP CAPACITY (GPM)	170
TOTAL HEAD (FT.)	41
MIN. SHUTOFF HEAD (FT.)	58
MAX. RPM	1750
ELECTRICAL CHARACTERISTICS (ø/V/Hz)	3 PHASE/240/60 HZ
MIN. SPHERE (IN.)	3
D1	4 IN.
D2	4 IN.
D3	6 IN.
D4	6 FT. DIA.
L1	3'-0"
L2	6'-0"
L3	8'-0"
A	5116.00
B	5116.50
C	5118.50
D	5119.00
E	5119.50
F	5127.10
G TWO PIPES	N 5119.20/S 5119.20
H	5122.10
I	5121.00

FOR PUMP PERFORMANCE CURVE SEE DETAIL
WASTEWATER PUMP CURVE E 84

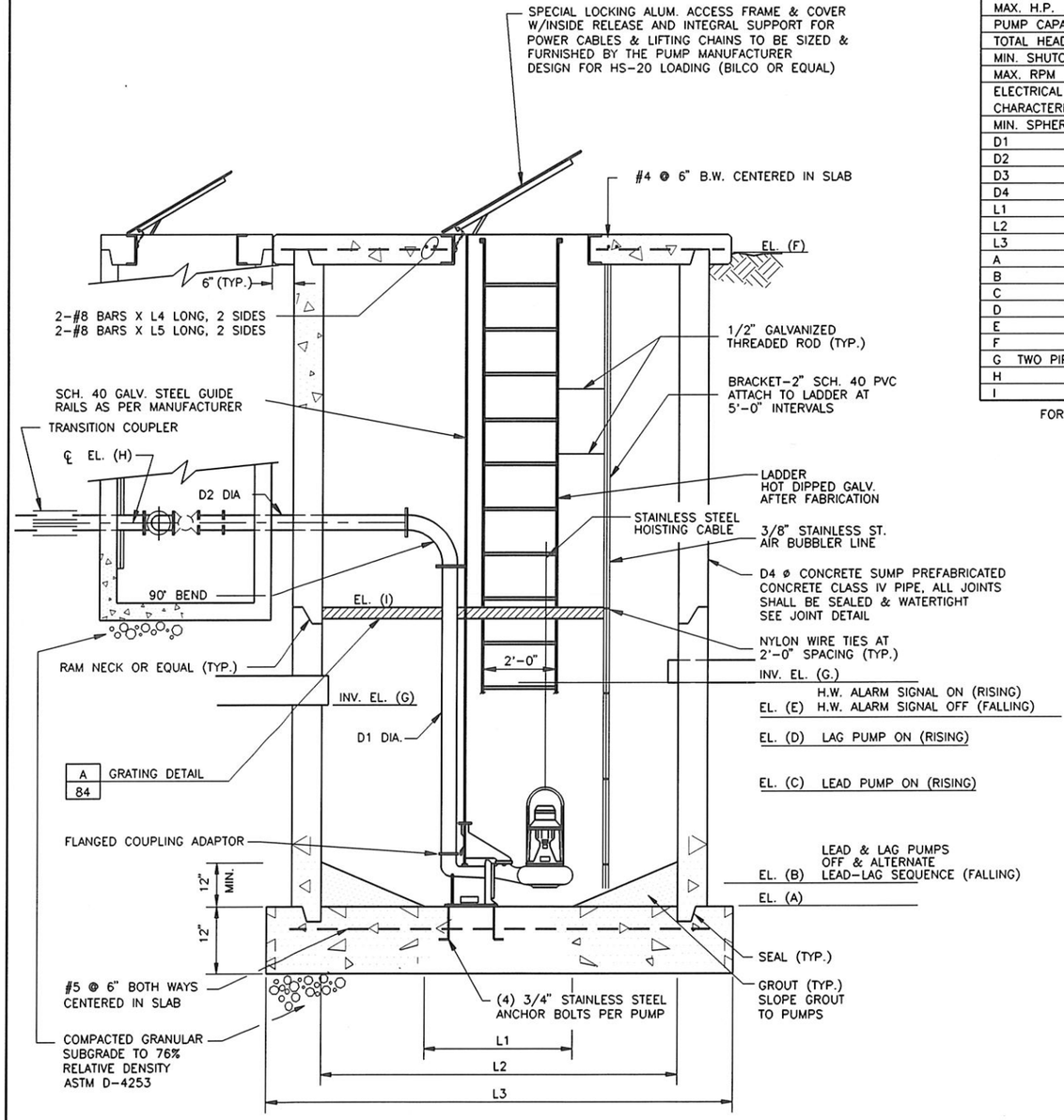

LIFT STATION ELEVATION
NOT TO SCALE

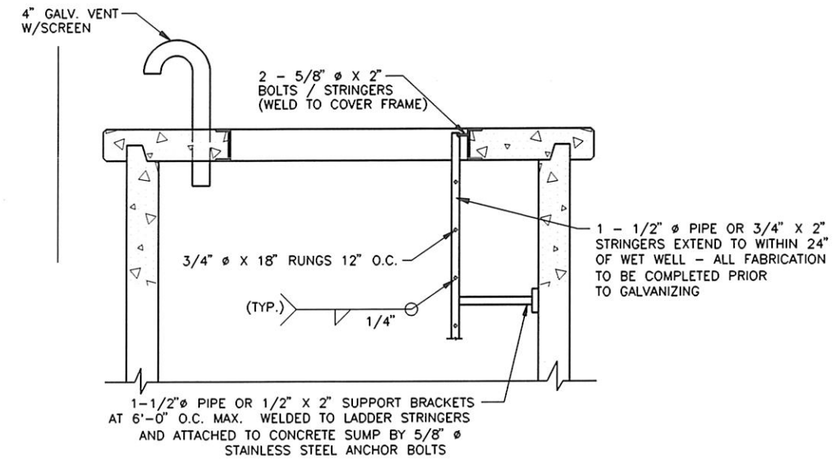

SECTION 1
NOT TO SCALE

NOTE:
ALL PIPING IN LIFT STATION AND 3' OUT OF BLDG. SHALL BE CLASS 51 D.I.

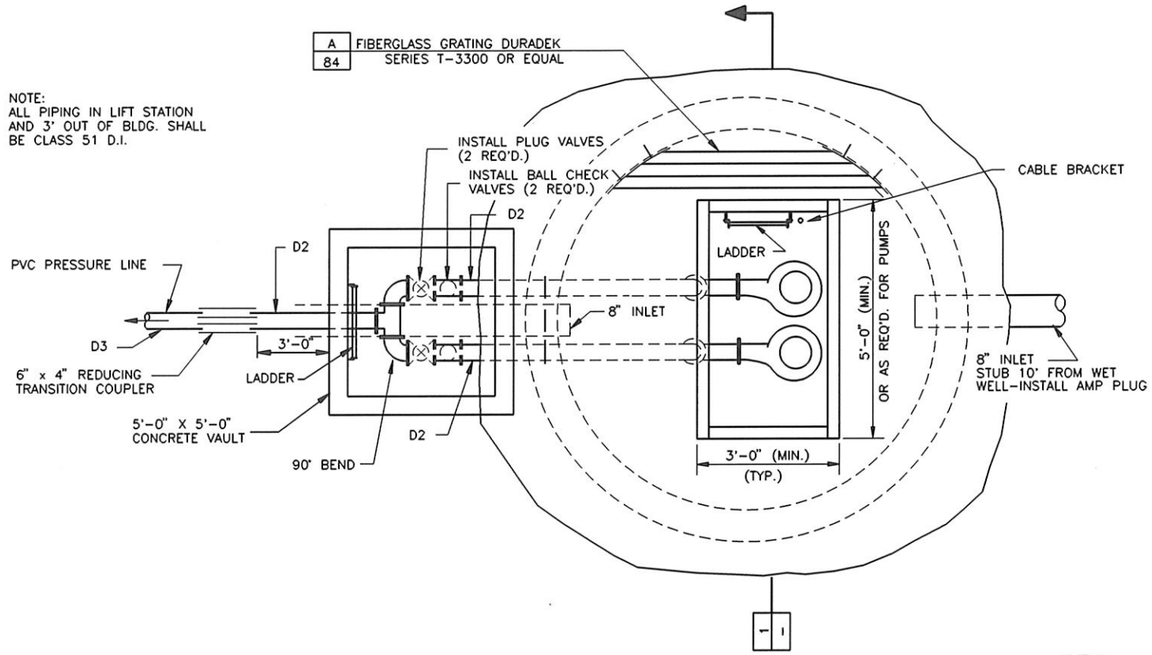

LIFT STATION PLAN
NOT TO SCALE

WARNING
THIS DRAWING REDUCED APPROX. ONE-HALF



NO.	REVISIONS	BY	DATE

DRAWN RSS 1/91 DATE CHECKED DATE
DESIGNED 3/91 DATE PROJECT ENGINEER
APPROVED 4/91 DATE PROJECT MANAGER

CITY OF BELLEVUE, IDAHO

FORSGREN ASSOCIATES / P.A.

WASTEWATER COLLECTION AND TREATMENT FACILITIES

LIFT STATION 2 DETAILS

PROJECT NO. 89067

SHEET NO. 82

BELPST41

PUMP STATION DESIGN

PARAMETER	VALUE
MAX. H.P.	4.0
PUMP CAPACITY (GPM)	200
TOTAL HEAD (FT.)	38
MIN. SHUTOFF HEAD (FT.)	57
MAX. RPM	1750
ELECTRICAL CHARACTERISTICS (ø/V/Hz)	3 PHASE/240/60HZ
MIN. SPHERE (IN.)	3
D1	4 IN.
D2	4 IN.
D3	6 IN.
D4	6 FT. DIA.
L1	3'-0"
L2	6'-0"
L3	8'-0"
A	5144.50
B	5145.00
C	5147.00
D	5147.50
E	5148.00
F	5155.50
G TWO PIPES	N 5147.35/S 5147.35
H	5150.50
I	5149.00

FOR PUMP PERFORMANCE CURVE SEE DETAIL
WASTEWATER PUMP CURVE E 84

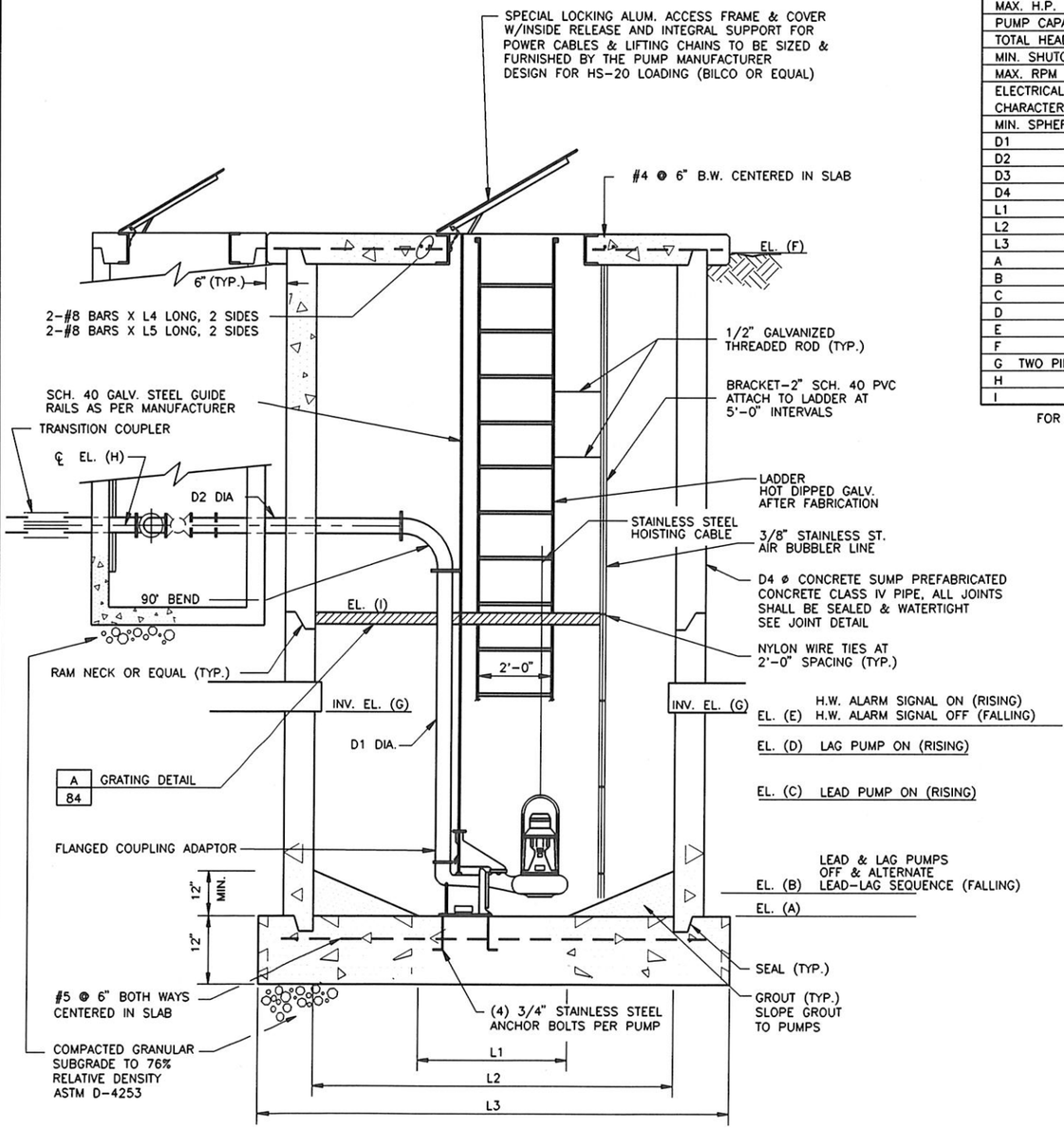

LIFT STATION ELEVATION
NOT TO SCALE

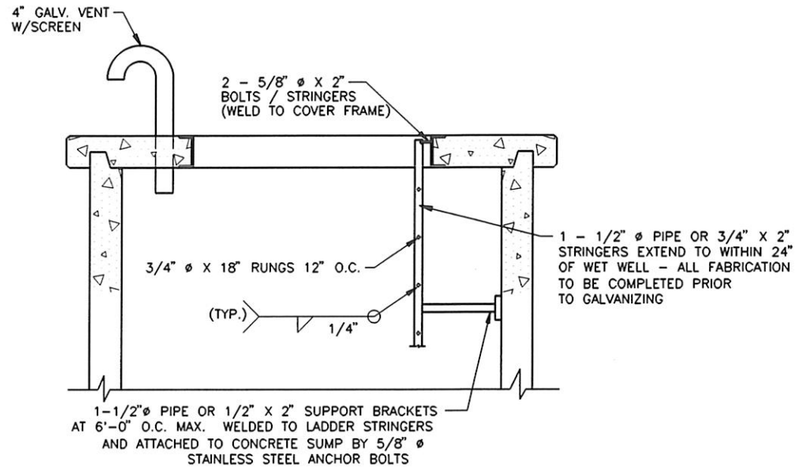

SECTION 1
NOT TO SCALE

NOTE:
ALL PIPING IN LIFT STATION AND 3' OUT OF BLDG. SHALL BE CLASS 51 D.I.

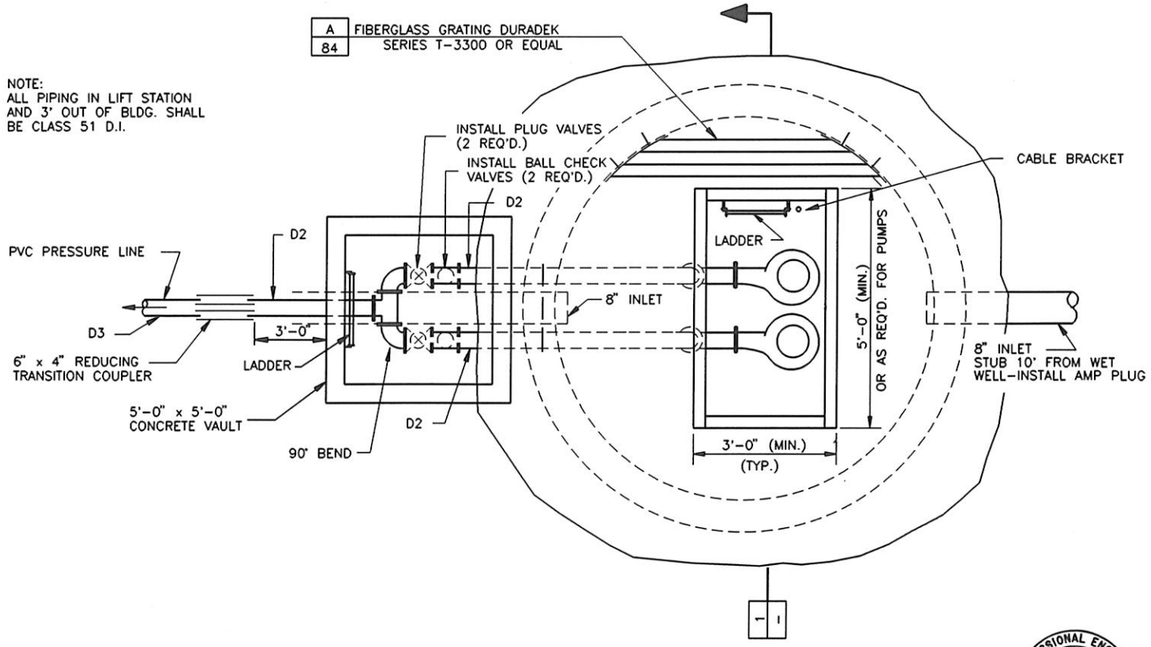

LIFT STATION PLAN
NOT TO SCALE

WARNING
THIS DRAWING REDUCED APPROX. ONE-HALF



NO.	REVISIONS	BY	DATE

DRAWN RSS 1/91 DATE CHECKED 3/91 DATE
DESIGNED 3/91 DATE PROJECT ENGINEER
APPROVED 3/91 DATE PROJECT MANAGER

CITY OF BELLEVUE, IDAHO

FORSGREN ASSOCIATES / P.A.

WASTEWATER COLLECTION AND TREATMENT FACILITIES

LIFT STATION 3 DETAILS

PROJECT NO. 89067

SHEET NO. 83

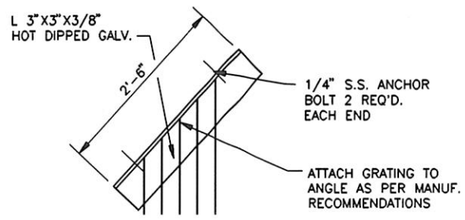

GRATING DETAIL A

NTS

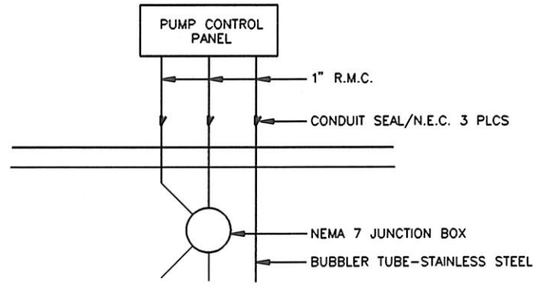

PUMP CONTROL ELECTRICAL DETAIL B

NOT TO SCALE

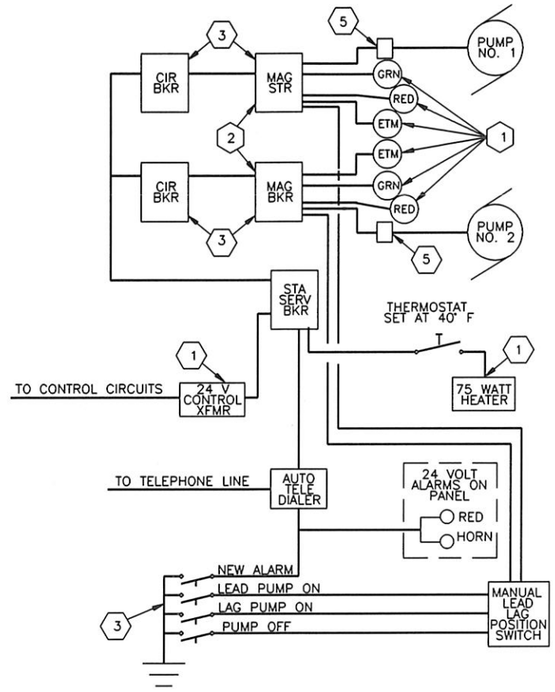

KEYED NOTES

1. MOUNTED IN PANEL
2. MAGNETIC STARTED SIZED PER NEC WITH "HAND-OFF-AUTO" SELECTOR SWITCH.
3. SIZED PER NEC
4. AIR BUBBLER LEVEL CONTROLLER
5. NEMA 7 JUNCTION BOXES – MOUNT ADJACENT TO LADDER

LIFT STATION ELECTRICAL C

NTS

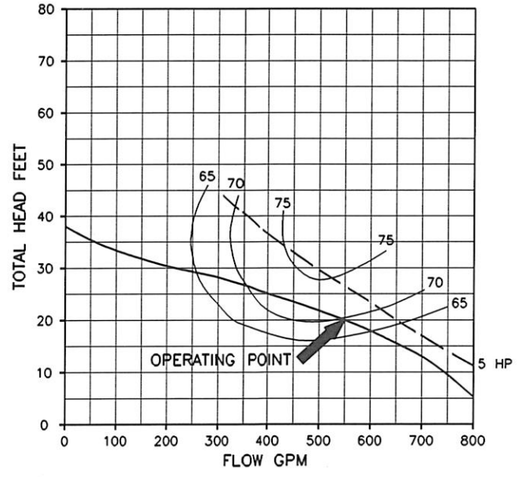

WASTEWATER PUMP CURVE D

LIFT STATION NO. 1 ONLY

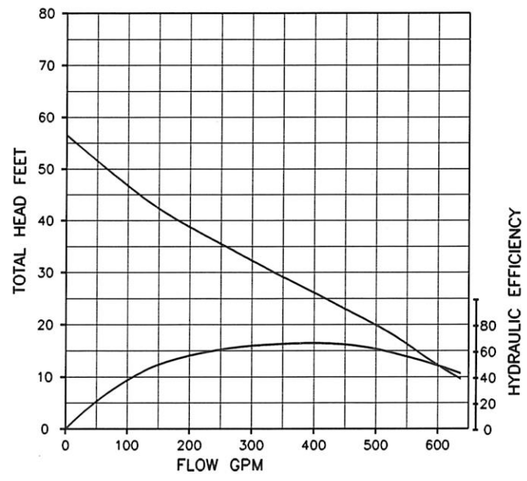

WASTEWATER PUMP CURVE E

LIFT STATIONS NO. 2 & 3

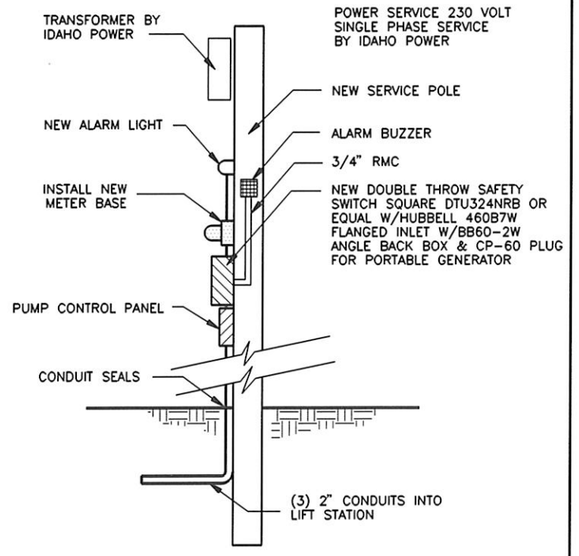

POWER SERVICE DETAIL F

LIFT STATIONS NO. 2 & 3

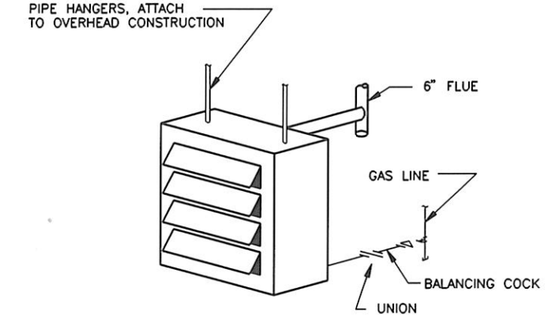

HEATER-MODINE #PA-150 1900 cfm, 150 M BTU INPUT 120 M BTU OUTPUT W/ELECTRONIC IGNITION AND SUMMER FAN SWITCH

WARNING

THIS DRAWING REDUCED APPROX. ONE-HALF

UNIT HEATER DETAIL G

LIFT STATION NO. 1 ONLY

PROFESSIONAL ENGINEER REGISTERED 6394 3/31/91 WILLIAM BRYAN TEUSCHER STATE OF IDAHO

NO.	REVISIONS	BY	DATE

DRAWN RSS 1/91 DATE CHECKED 3/91 DATE

DESIGNED 3/91 DATE PROJECT ENGINEER

APPROVED 4/9/91 DATE PROJECT MANAGER

CITY OF BELLEVUE, IDAHO

FORSGREN ASSOCIATES / P.A.

WASTEWATER COLLECTION AND TREATMENT FACILITIES

LIFT STATION MISCELLANEOUS DETAILS

PROJECT NO. 89067

SHEET NO. 84

BELPS746

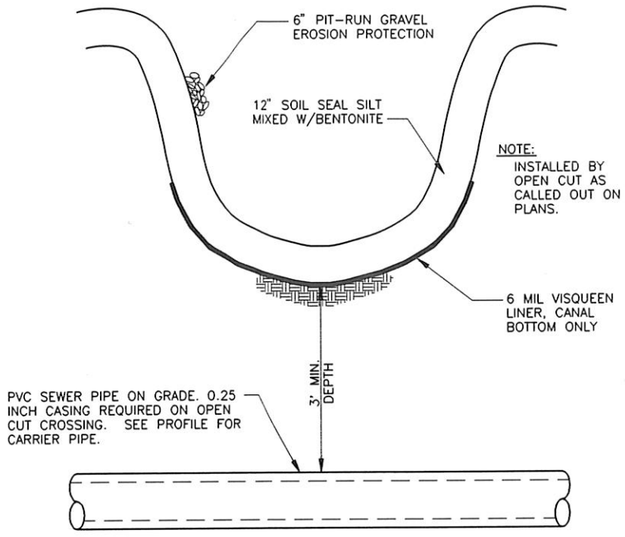

TYPICAL CANAL CROSSING A
NOT TO SCALE

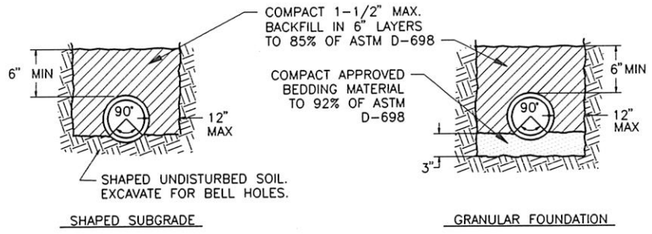

PIPE BEDDING FOR RIGID PIPE

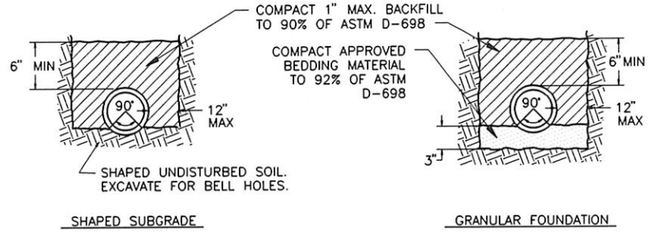

PIPE BEDDING FOR FLEXIBLE PIPE

PIPE BEDDING DETAILS B
NOT TO SCALE

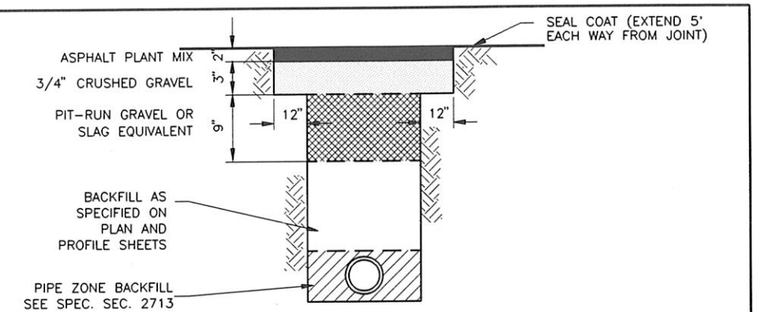

CLASS 'A' STREET REPAIR C
NOT TO SCALE

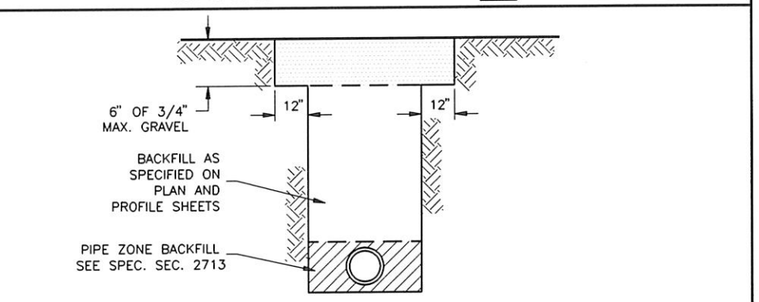

CLASS 'C' STREET REPAIR D
NOT TO SCALE

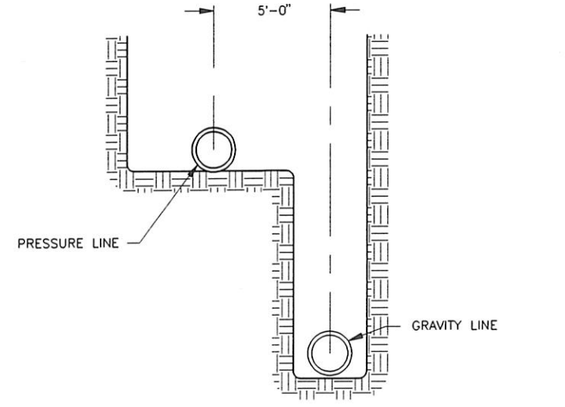

JOINT TRENCH AND BEDDING DETAIL E
NOT TO SCALE

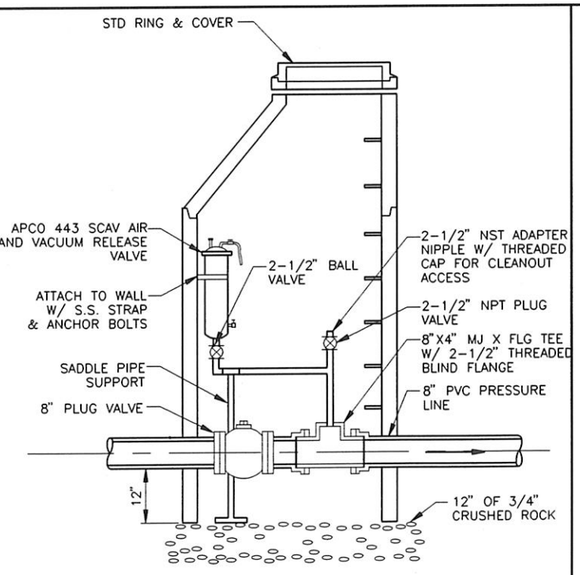

AIR RELEASE VALVE F
NOT TO SCALE

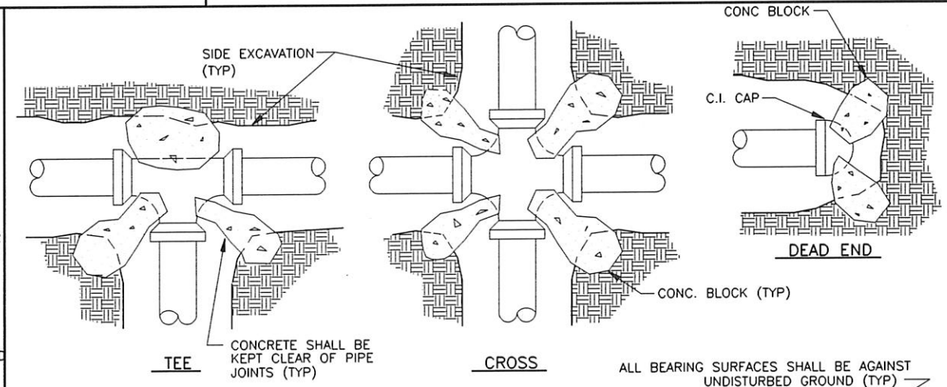

BEARING AREAS EACH DIRECTION OF THRUST IN SQUARE FEET				
PIPE SIZE	TEES & DEAD END	90° ELBOW	45°ELBOW CROSSES IN DIRECTION OF FL.	22 1/2° ELBOW
6"	4.0	5.5	3.0	2.0
8"	7.0	9.5	5.0	3.0
10"	9.5	13.5	7.0	4.0
12"	13.5	19.0	10.0	5.0
14"	18.0	23.5	14.0	7.0
16"	23.0	33.0	18.0	9.0

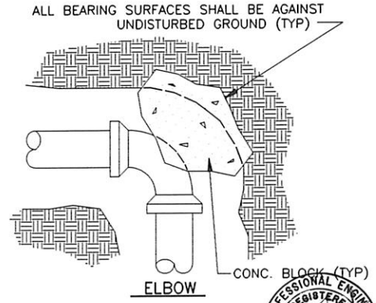

WARNING
THIS DRAWING REDUCED APPROX. ONE-HALF

TYPICAL THRUST BLOCK INSTALLATION G
NOT TO SCALE

PROFESSIONAL ENGINEER REGISTERED 6394 STATE OF IDAHO WILLIAM BRYAN TEUSCHER 7/91

PLOT SCALE 1=1
BEL-DET2

NO.	REVISIONS	BY	DATE

DRAWN BWM 7/90 DATE CHECKED DATE
DESIGNED 7/91 DATE PROJECT ENGINEER
APPROVED 7/91 DATE PROJECT MANAGER

CITY OF BELLEVUE, IDAHO

FORSGREN ASSOCIATES / P.A.

WASTEWATER TREATMENT & COLLECTION FACILITIES

MISCELLANEOUS DETAILS

PROJECT NO. 89067

SHEET NO. 85

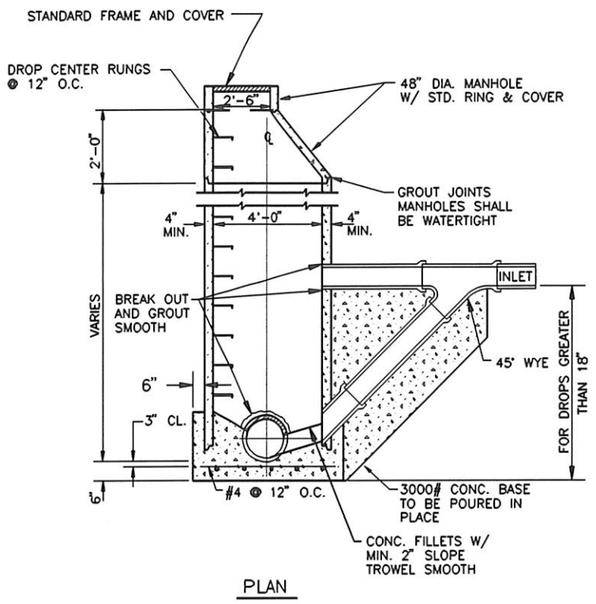

TYPICAL DROP MANHOLE — A
NOT TO SCALE

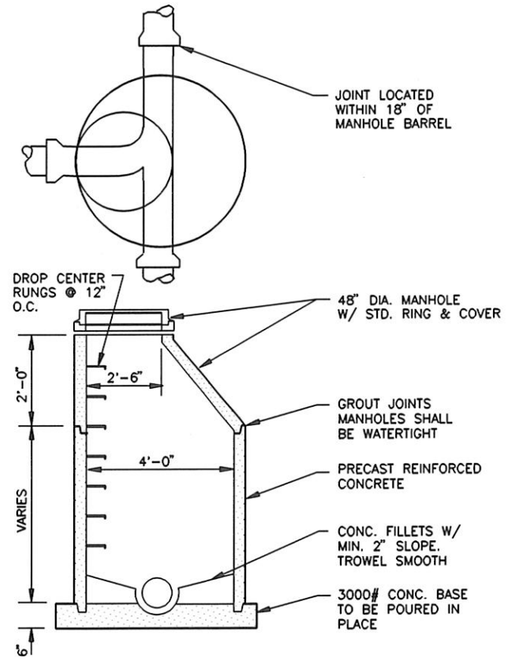

ECCENTRIC SEWER MANHOLE — B
NOT TO SCALE

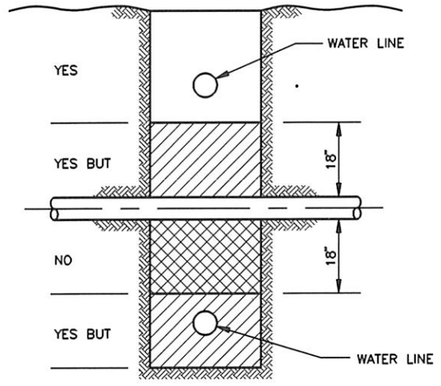

THE WATER LINE SHOULD BE PLACED IN THIS ZONE IF IT IS PRACITCAL.

THE WATER LINE MAY BE PLACED IN THESE ZONES, BUT THE SEWER LINE MUST BE REBUILT TO WATER LINE STANDARDS.

THE WATER LINE MAY NOT BE PLACED IN THIS ZONE.

IN LIEU OF CONSTRUCTION OR RECONSTRUCTING THE SEWER WITH PIPE WHICH CONFORMS TO WATER MAIN STANDARDS THE WATER LINE OR SEWER LINE OR BOTH MAY BE ENCASED IN FOUR (4) INCHES OF CONCRETE MEASURED AT THE BELL.

SEWER LINE CROSSING — C
NOT TO SCALE

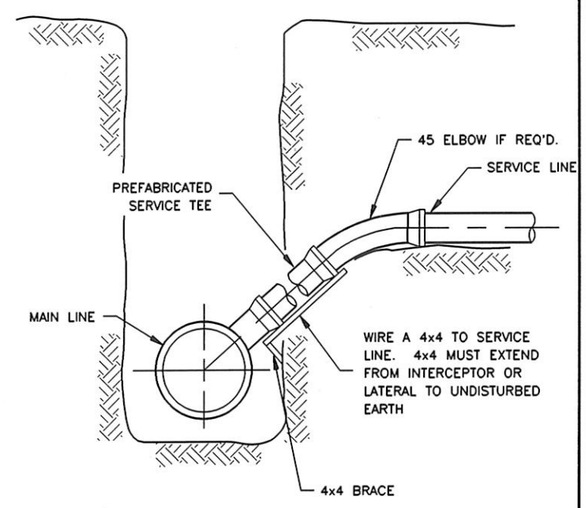

TYPICAL DEEP SERVICE CONNECTION — D
NOT TO SCALE

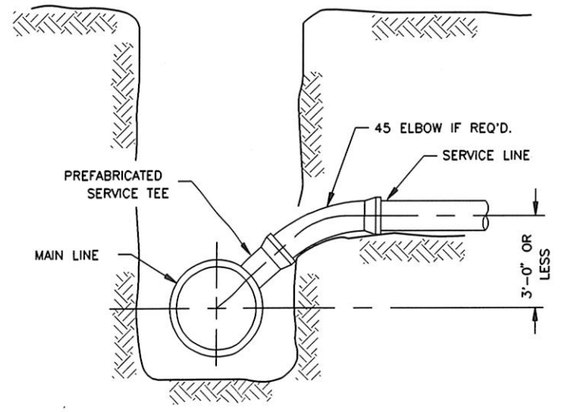

TYPICAL SERVICE LINE CONNECTION — E
NOT TO SCALE

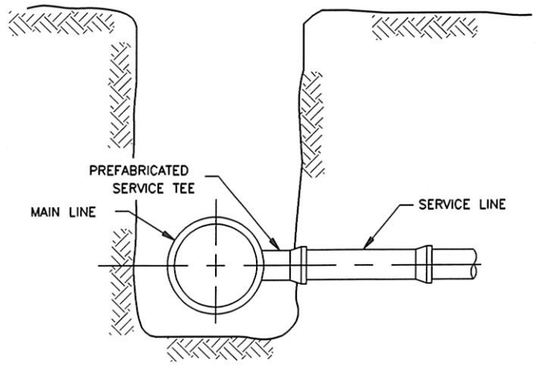

SHALLOW SERVICE LINE CONNECTION — F
NOT TO SCALE

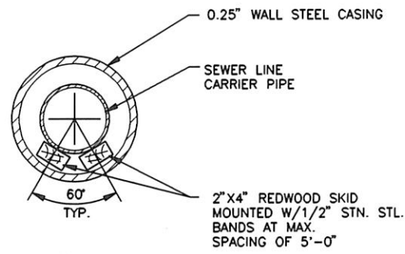

CASING SIZE REQUIRED

CARRIER PIPE	CASING SIZE
8 INCH	14 INCH
15 INCH	24 INCH

HIGHWAY AND CANAL CROSSING CASING DETAIL — G
NOT TO SCALE

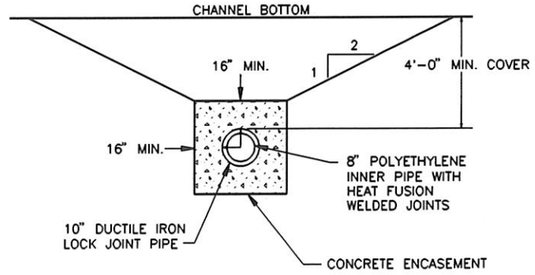

WARNING
THIS DRAWING REDUCED
APPROX. ONE-HALF

RIVER CROSSING DETAIL — H
NOT TO SCALE

WILLIAM BRYAN TEUSCHER — REGISTERED PROFESSIONAL ENGINEER — 6394 — STATE OF IDAHO — 7/91

NO.	REVISIONS	BY	DATE

DRAWN BWM 7/90 DATE — CHECKED 7/91 DATE
DESIGNED 7/91 DATE — PROJECT ENGINEER
APPROVED 7/91 DATE — PROJECT MANAGER

CITY OF BELLEVUE, IDAHO

FORSGREN ASSOCIATES / P.A.

WASTEWATER TREATMENT & COLLECTION FACILITIES

MISCELLANEOUS DETAILS

PROJECT NO. 89067

SHEET NO. 86

BEL-DET1

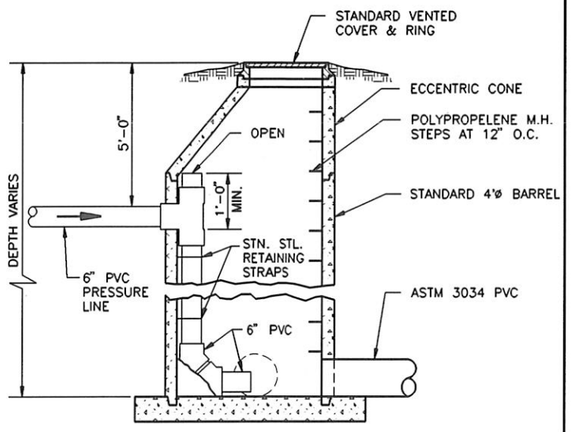

TRANSITION MANHOLE A

NOT TO SCALE

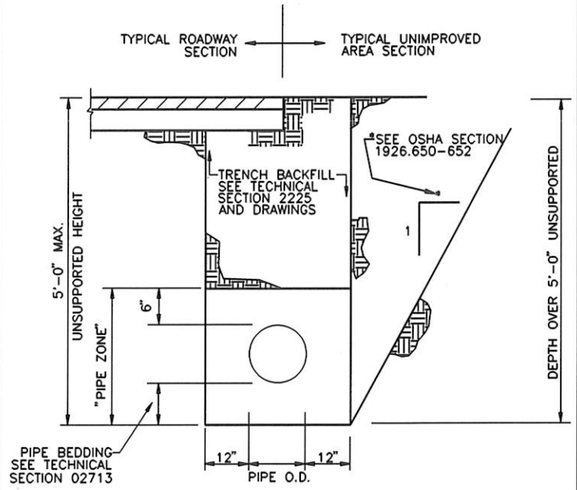

TYPICAL TRENCH B

NOT TO SCALE

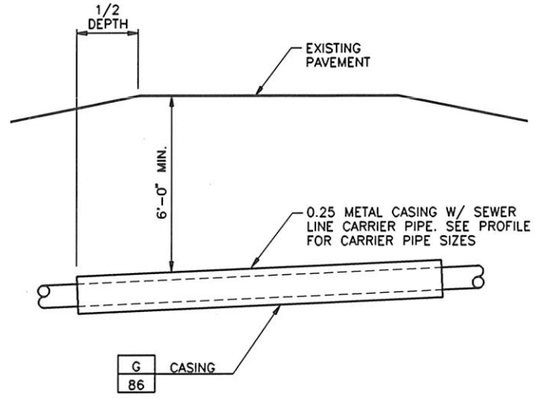

TYPE 'B' HIGHWAY CROSSING C

NOT TO SCALE

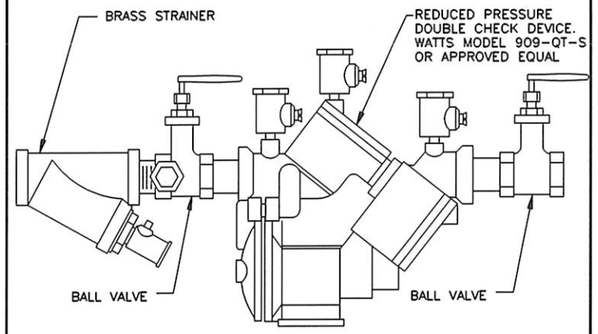

REDUCED PRESSURE BACKFLOW PREVENTER D

NOT TO SCALE

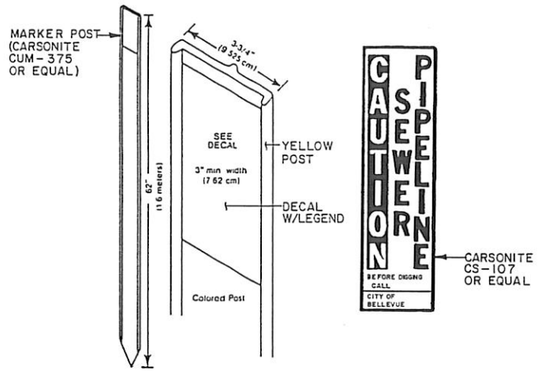

NOTE:
MARKERS TO BE INSTALLED AT 500' INTERVALS ALONG 4" OR LARGER PRESSURE LINES. ALSO AT ALL HWY. CROSSINGS, 90° DIRECTION CHANGES, AND AT ANY LOCATION DIRECTED BY THE ENGINEER.

PRESSURE LINE MARKER E

WILLIAM PROFESSIONAL ENGINEER REGISTERED 6394 STATE OF IDAHO WILLIAM BRYAN TEUSCHER 7/91

WARNING
THIS DRAWING REDUCED
APPROX. ONE-HALF

NO.	REVISIONS	BY	DATE

DRAWN MFF 3/91 DATE — CHECKED 3/91 DATE

DESIGNED 3/91 DATE — PROJECT ENGINEER

APPROVED 4/91 DATE — PROJECT MANAGER

CITY OF BELLEVUE, IDAHO

FORSGREN ASSOCIATES / P.A.

WASTEWATER TREATMENT & COLLECTION FACILITIES

MISCELLANEOUS DETAILS

PROJECT NO. 189067

SHEET NO. 87

REL - DET.3

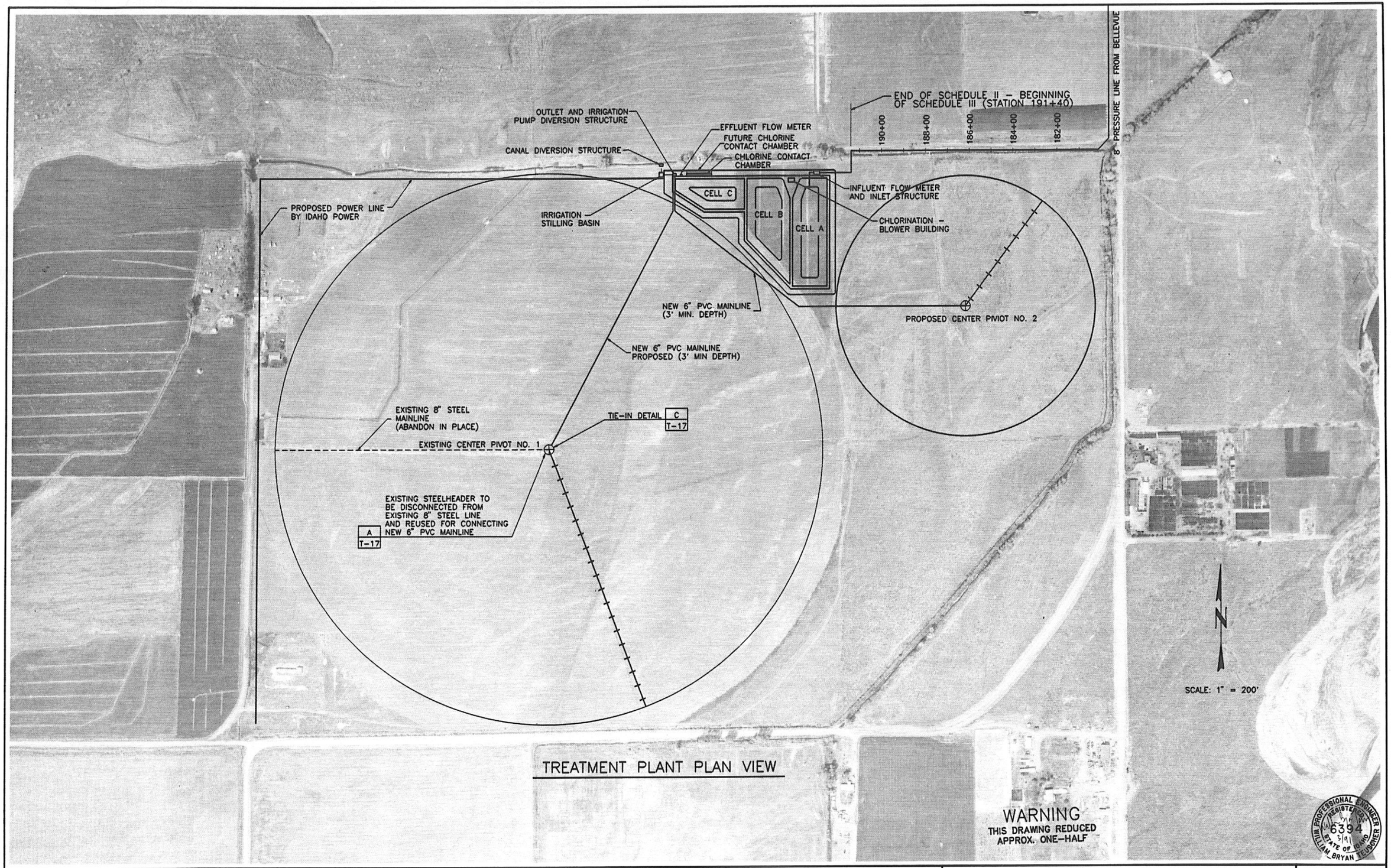

TREATMENT PLANT PLAN VIEW

WARNING
THIS DRAWING REDUCED
APPROX. ONE-HALF

WILLIAM BRYAN TELSPORER
REGISTERED
PROFESSIONAL ENGINEER
STATE OF IDAHO
6394
5/91

BELSITE1 PLOT SCALE 1=200

NO.	REVISIONS	BY	DATE

DRAWN MFF 1-91 DATE CHECKED DATE
DESIGNED DATE PROJECT ENGINEER
APPROVED 4/91 DATE PROJECT MANAGER

CITY OF BELLEVUE,
IDAHO

FORSGREN ASSOCIATES / P.A.

WASTEWATER COLLECTION AND TREATMENT FACILITIES

TREATMENT PLANT LAYOUT AND LAND APPLICATION

PROJECT NO. 89067

SHEET NO. T-1

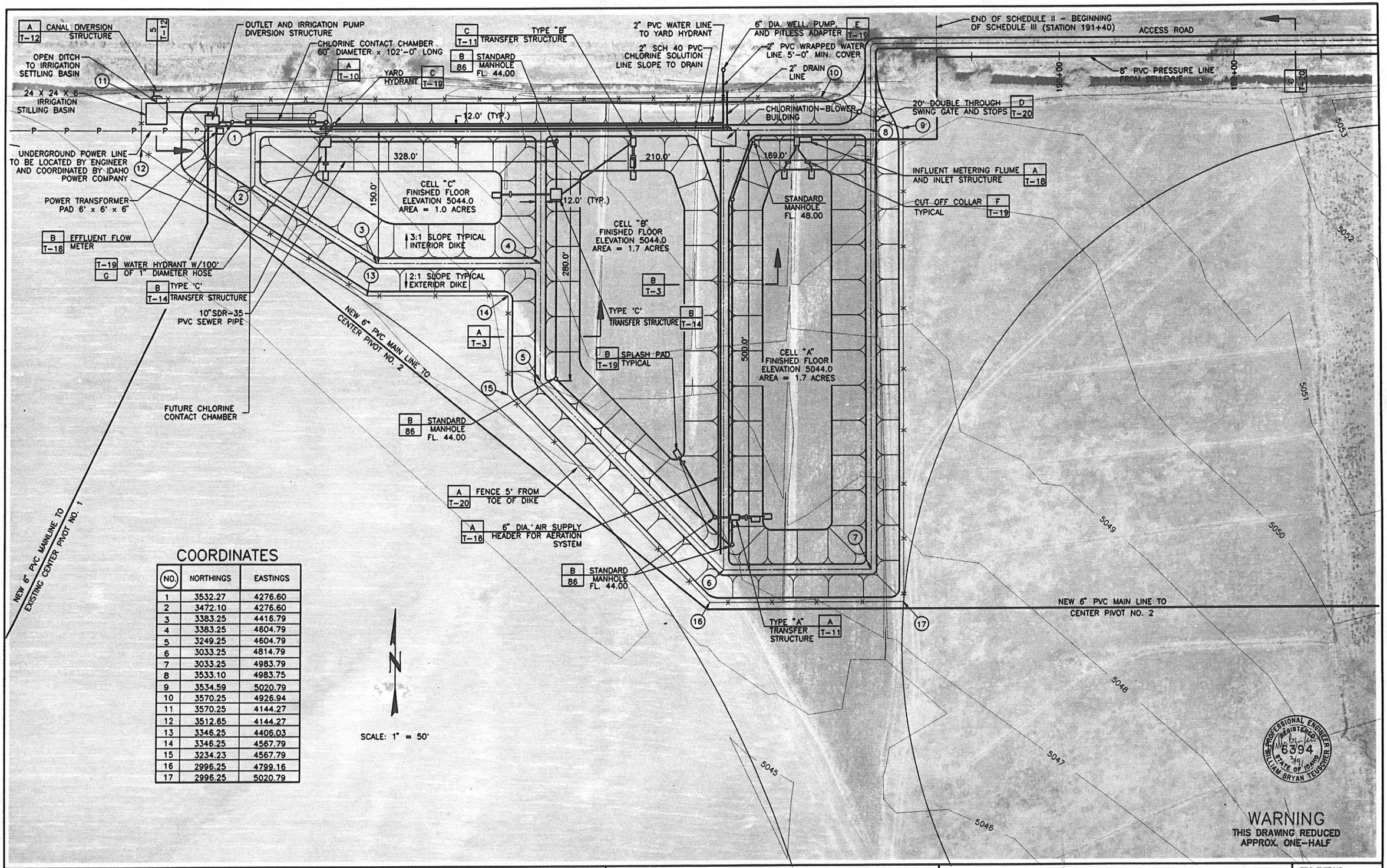

COORDINATES

NO.	NORTHINGS	EASTINGS
1	3532.27	4276.60
2	3472.10	4276.60
3	3383.25	4416.79
4	3383.25	4604.79
5	3249.25	4604.79
6	3033.25	4814.79
7	3033.25	4983.79
8	3533.10	4983.75
9	3534.59	5020.79
10	3570.25	4926.94
11	3570.25	4144.27
12	3512.65	4144.27
13	3346.25	4406.03
14	3346.25	4567.79
15	3234.23	4567.79
16	2996.25	4799.16
17	2996.25	5020.79

PROFESSIONAL ENGINEER REGISTERED 6394 STATE OF IDAHO WILLIAM BRYAN TEUSCHER

WARNING
THIS DRAWING REDUCED APPROX. ONE-HALF

PLOT SCALE 1=50

BELSITE2

NO.	REVISIONS	BY	DATE

DRAWN MFF 1-91 DATE CHECKED 3/91 DATE
DESIGNED 3/91 DATE PROJECT ENGINEER
APPROVED 4/91 DATE PROJECT MANAGER

CITY OF BELLEVUE, IDAHO

FORSGREN ASSOCIATES / P.A.

WASTEWATER COLLECTION AND TREATMENT FACILTY

TREATMENT PLANT LAYOUT

PROJECT NO. 89067

SHEET NO. T-2

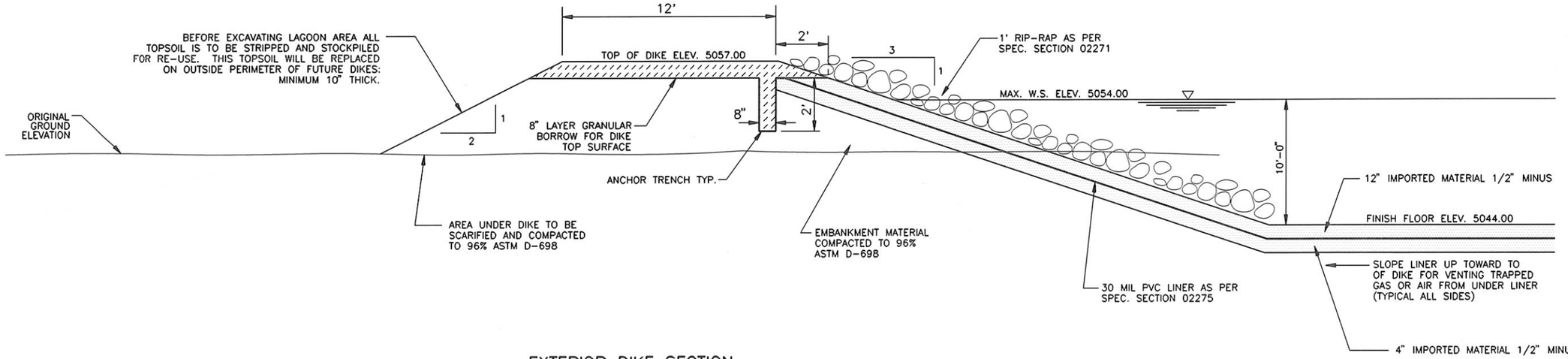

EXTERIOR DIKE SECTION
PVC MEMBRANE LINER
NOT TO SCALE — A

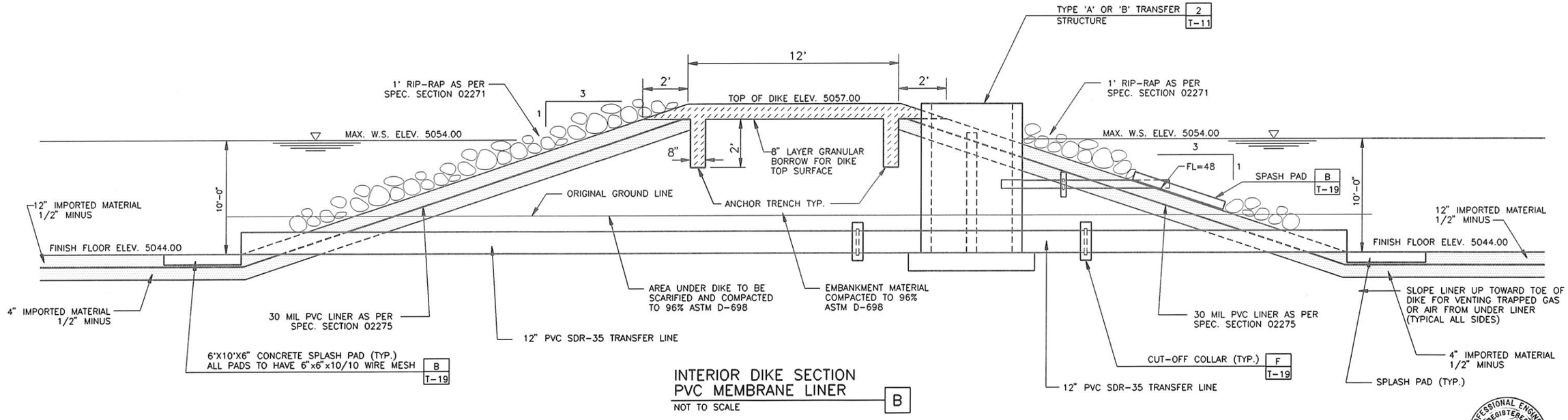

INTERIOR DIKE SECTION
PVC MEMBRANE LINER
NOT TO SCALE — B

WILLIAM PROFESSIONAL ENGINEER REGISTERED 6394 STATE OF IDAHO WILLIAM BRYAN TEUSCHER
3/91

WARNING
THIS DRAWING REDUCED
APPROX. ONE-HALF

PLOT SCALE 1=1

NO.	REVISIONS	BY	DATE

DRAWN 7/89 JLT DATE — CHECKED 3/91 DATE
DESIGNED 3/91 DATE — PROJECT ENGINEER
APPROVED 4/91 DATE — PROJECT MANAGER

CITY OF BELLEVUE,
IDAHO

FORSGREN ASSOCIATES / P.A.

WASTEWATER COLLECTION & TREATMENT FACILITIES

EXTERIOR/INTERIOR DIKE SECTIONS

PROJECT NO. 89067

SHEET NO. T-3

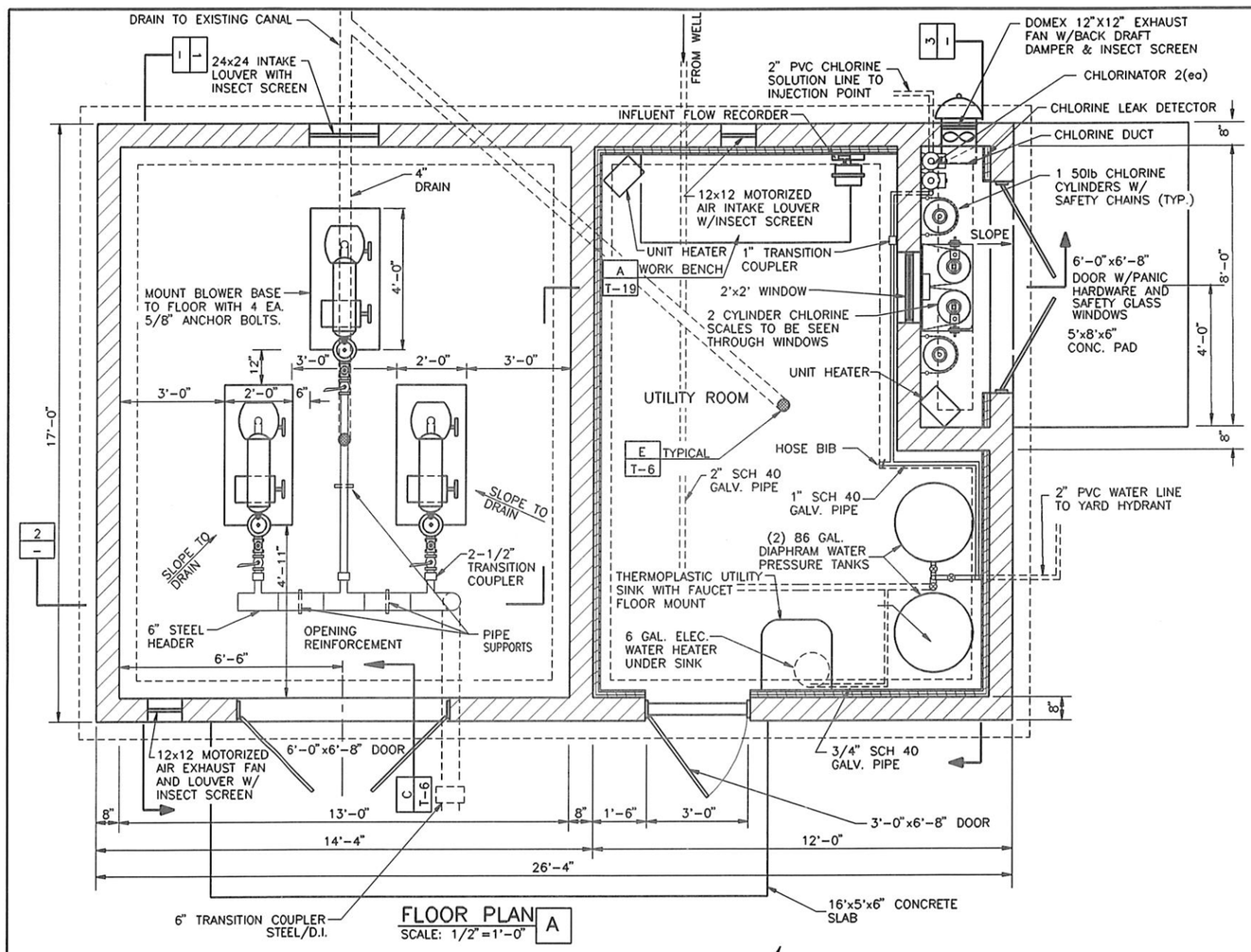

FLOOR PLAN A
SCALE: 1/2"=1'-0"

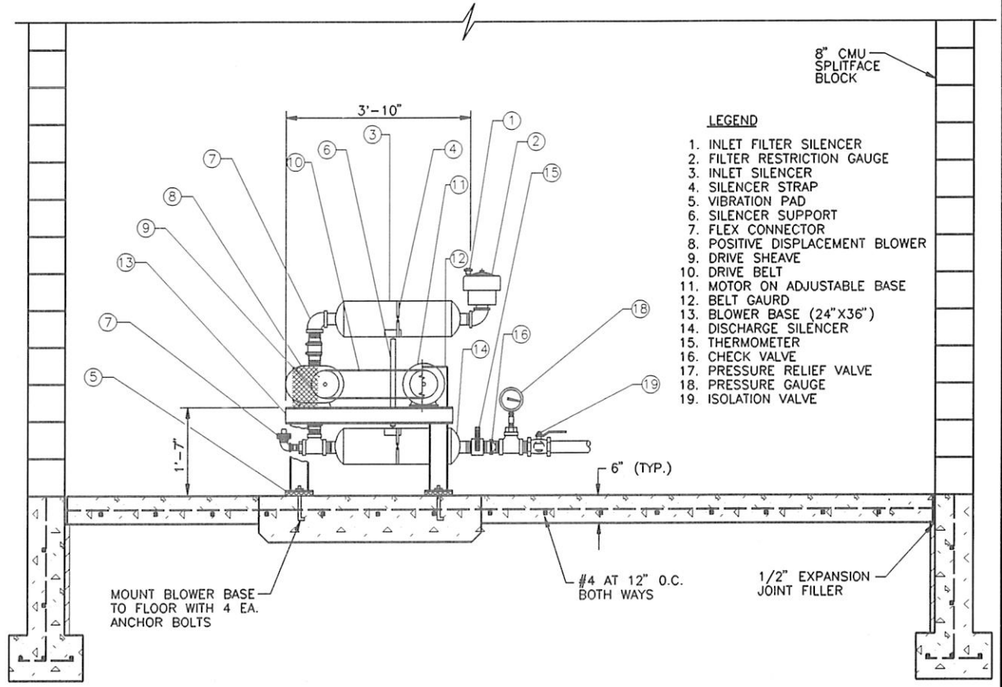

SECTION
SCALE: 3/4"=1'-0" 1

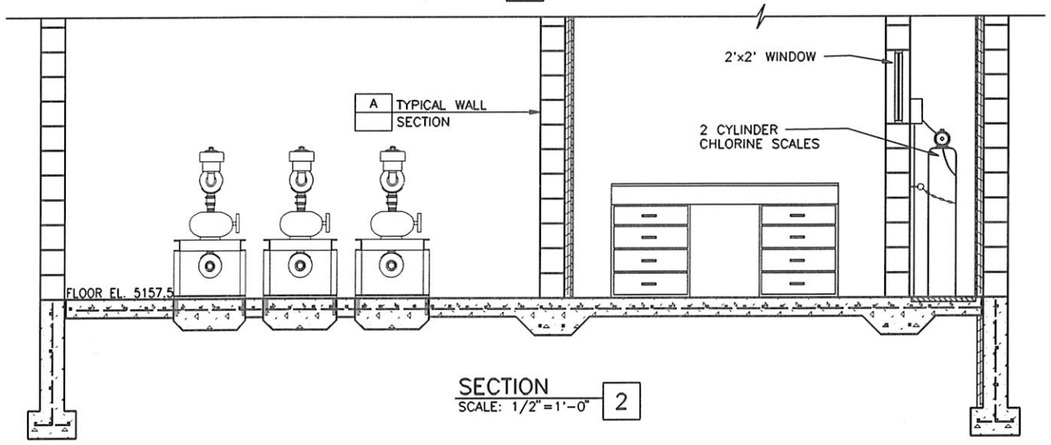

SECTION
SCALE: 1/2"=1'-0" 2

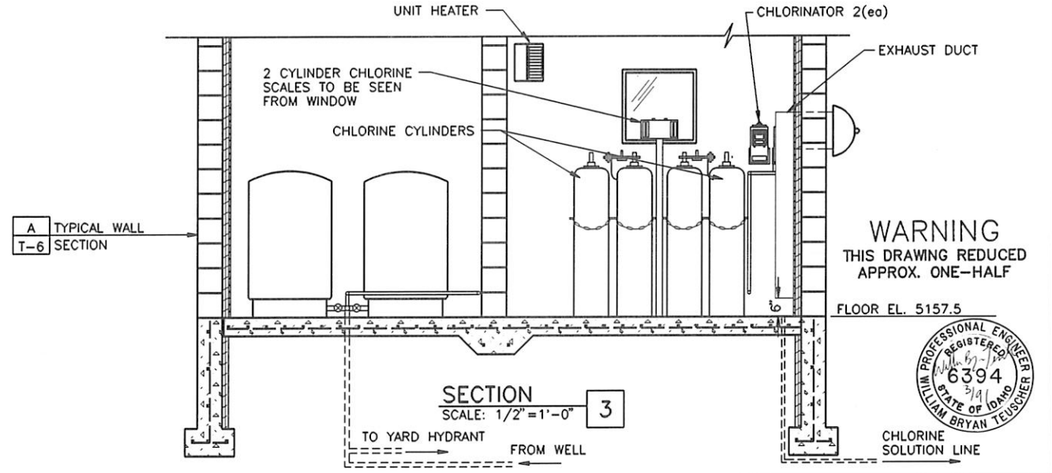

SECTION
SCALE: 1/2"=1'-0" 3

WARNING
THIS DRAWING REDUCED APPROX. ONE-HALF

REGISTERED PROFESSIONAL ENGINEER
6394
STATE OF IDAHO
WILLIAM BRYAN TEUSCHER

NO.	REVISIONS	BY	DATE

DRAWN 6/89 JLT DATE — CHECKED 3/91 DATE
DESIGNED 3/91 DATE — PROJECT ENGINEER
APPROVED 4/91 DATE — PROJECT MANAGER

CITY OF BELLEVUE, IDAHO

FORSGREN ASSOCIATES / P.A.

WASTEWATER COLLECTION AND TREATMENT FACILITIES

CLORINATION-AERATION BUILDING FLOOR PLAN

PROJECT NO. 89067

SHEET NO. T-4

PLOT SCALE 1=24

BELFLR1

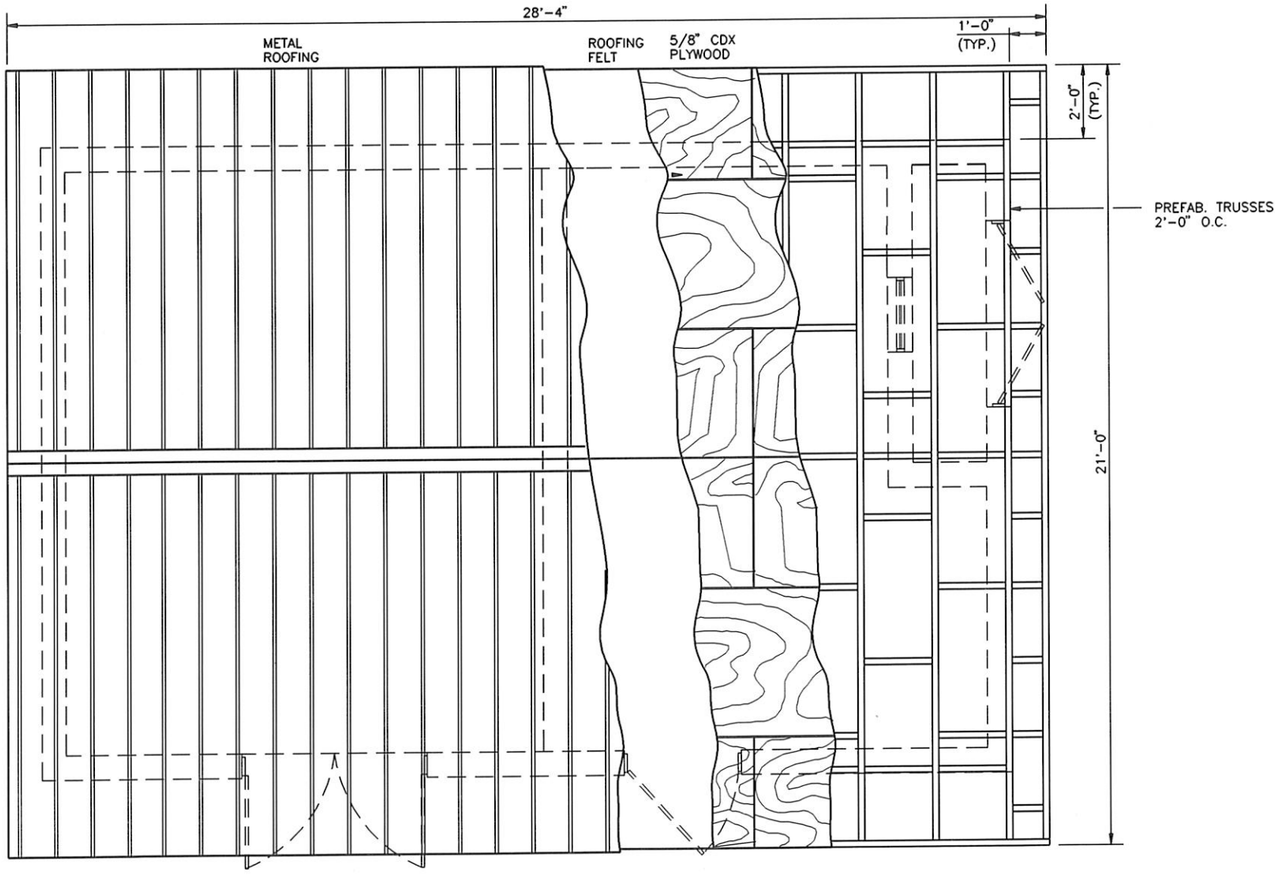

ROOFING DETAIL A
SCALE: 1/2" = 1'-0"

WARNING
THIS DRAWING REDUCED
APPROX. ONE-HALF

PROFESSIONAL ENGINEER REGISTERED 6394 STATE OF IDAHO WILLIAM BRYAN TEUSCHER

PLOT SCALE 1=24

BELFLR2

NO.	REVISIONS	BY	DATE

DRAWN 6/89 JLT DATE CHECKED 4/91 DATE
DESIGNED 3/91 DATE PROJECT ENGINEER
APPROVED 4/91 DATE PROJECT MANAGER

CITY OF BELLEVUE, IDAHO

FORSGREN ASSOCIATES / P.A.

WASTEWATER COLLECTION AND TREAMENT FACILITIES

CLORINATION-AERATION BUILDING DETAILS

PROJECT NO. 89067

SHEET NO. T-5

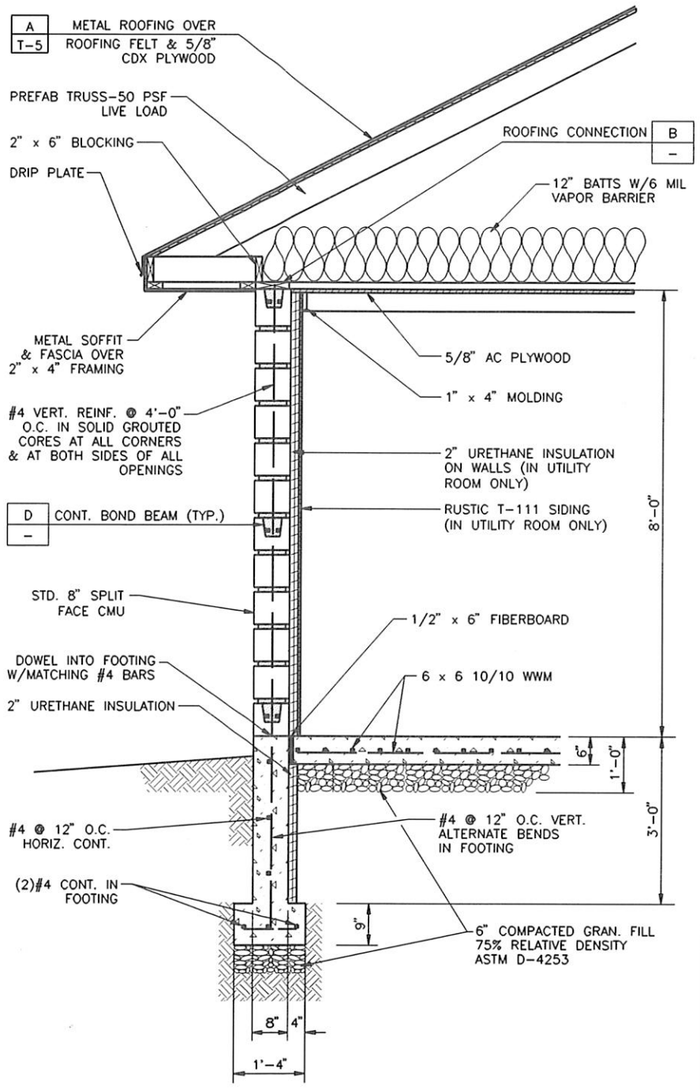

TYPICAL WALL SECTION A

SCALE: 3/4"=1'-0"

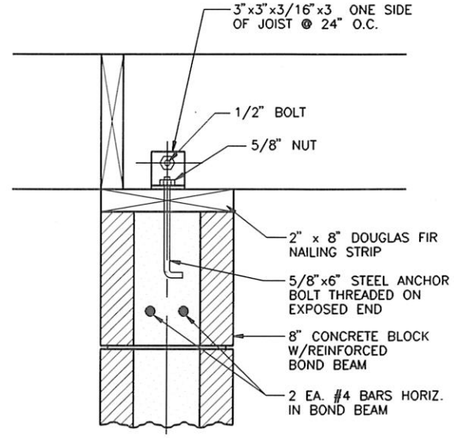

ROOF CONNECTION B

NOT TO SCALE

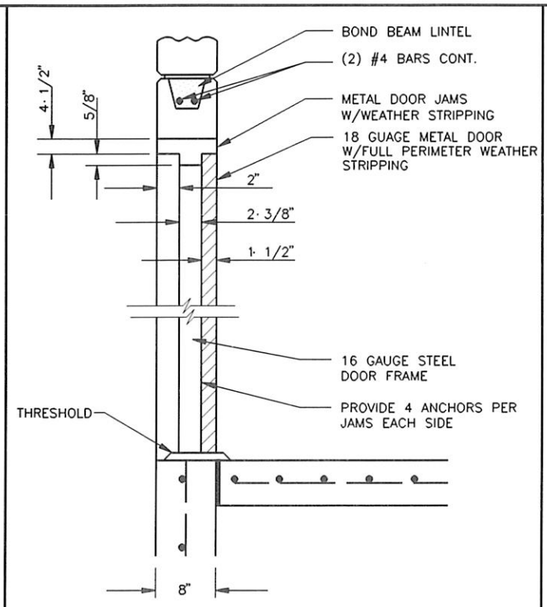

DOOR DETAIL C

NOT TO SCALE

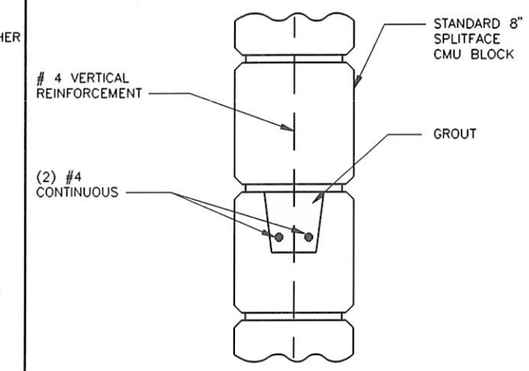

BOND BEAM DETAIL D

NOT TO SCALE

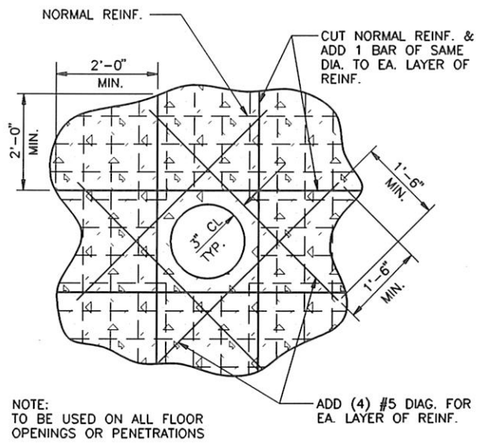

NOTE:
TO BE USED ON ALL FLOOR OPENINGS OR PENETRATIONS

FLOOR OPENING REINFORCEMENT E

NOT TO SCALE

WARNING
THIS DRAWING REDUCED APPROX. ONE-HALF

PROFESSIONAL ENGINEER REGISTERED 6394 STATE OF IDAHO WILLIAM BRYAN TEUSCHER 3/91

PLOT SCALE 1=16

BELL/DDT

NO.	REVISIONS	BY	DATE

DRAWN 6/89 JLT DATE — CHECKED 3/91 DATE

DESIGNED 3/91 DATE — PROJECT ENGINEER

APPROVED 3/91 DATE — PROJECT MANAGER

CITY OF BELLEVUE, IDAHO

FORSGREN ASSOCIATES / P.A.

WASTEWATER COLLECTION AND TREATMENT FACILITIES

CLORINATION–AERATION BUILDING DETAILS

PROJECT NO. 89067

SHEET NO. T-6

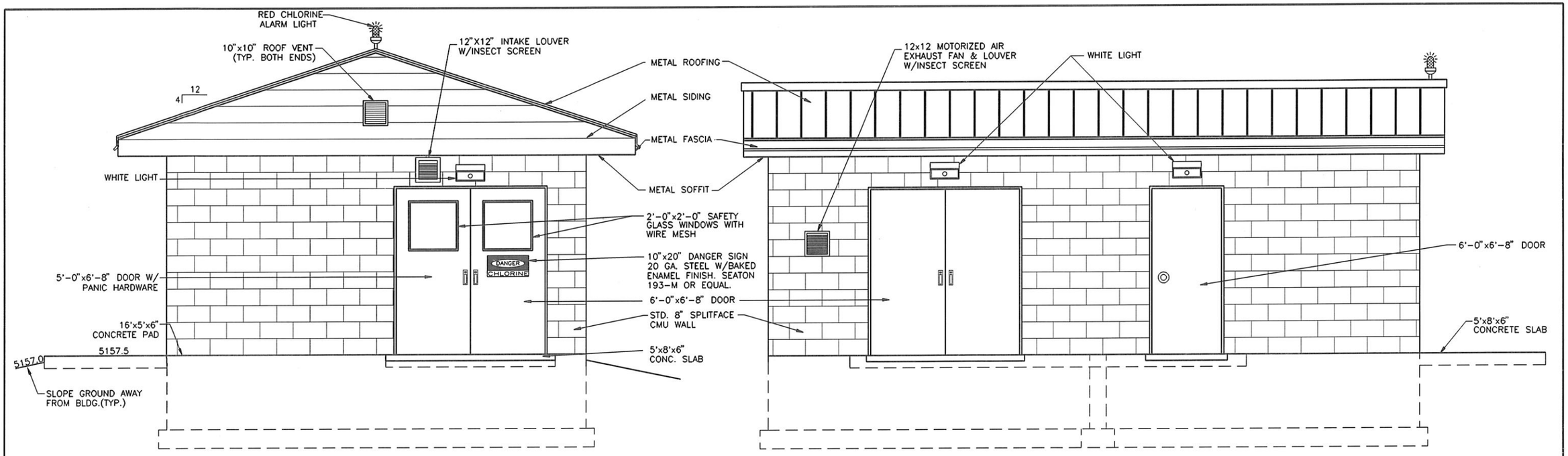

EAST ELEVATION A
SCALE: 1/2"=1'-0"

SOUTH ELEVATION B
SCALE: 1/2"=1'-0"

NORTH ELEVATION C
SCALE: 1/2"=1'-0"

WARNING
THIS DRAWING REDUCED APPROX. ONE-HALF

PROFESSIONAL ENGINEER REGISTERED 6394 STATE OF IDAHO WILLIAM BRYAN TEUSCHER

PLOT SCALE 1=24

BELBELEV

NO.	REVISIONS	BY	DATE

DRAWN _____ DATE CHECKED 2/91 DATE

DESIGNED 3/91 DATE PROJECT ENGINEER

APPROVED 3/91 DATE PROJECT MANAGER

CITY OF BELLEVUE, IDAHO

FORSGREN ASSOCIATES / P.A.

WASTEWATER COLLECTION AND TREATMENT FACILITIES

CLORINATION-AERATION BUILDING ELEVATIONS

PROJECT NO. 89067

SHEET NO. T-7

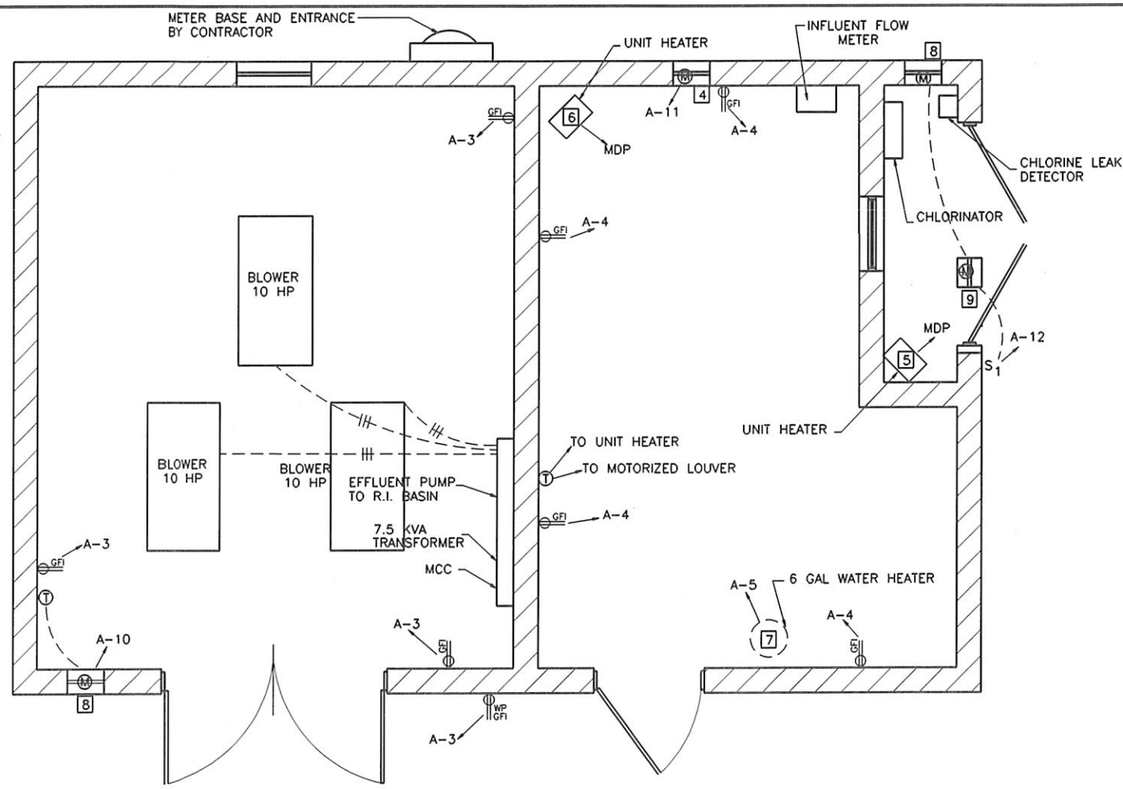

ELECTRIC FLOOR PLAN A
SCALE: 1/2"=1'-0"

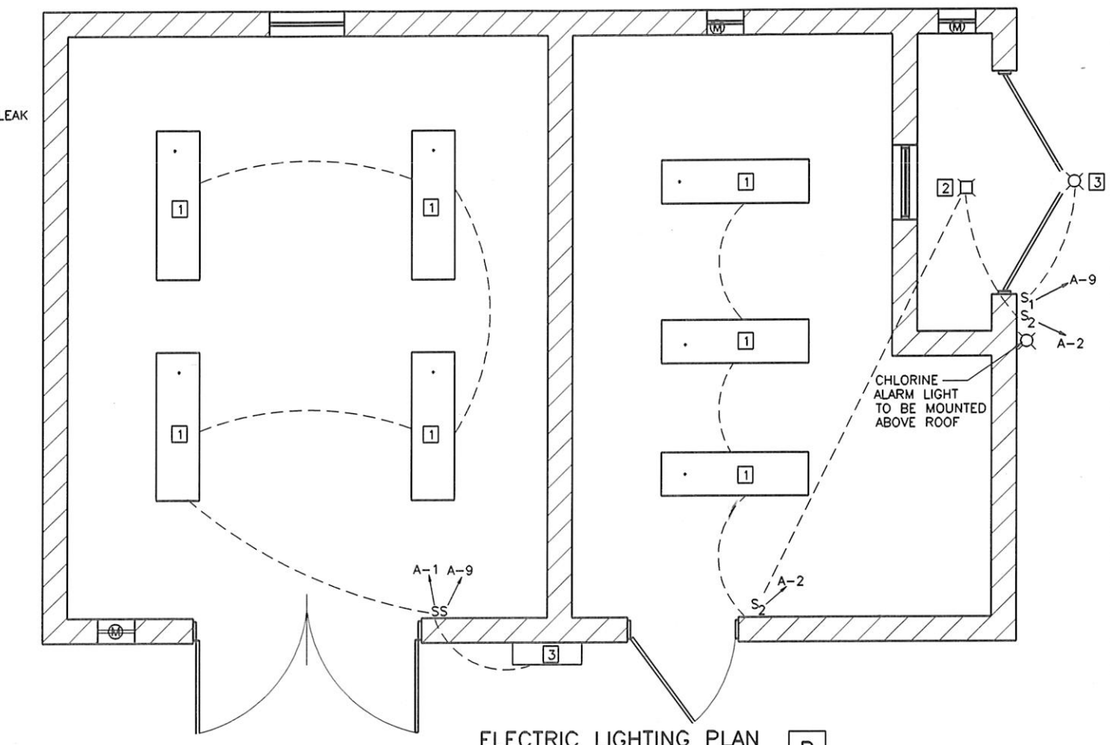

ELECTRIC LIGHTING PLAN B
SCALE: 1/2"=1'-0"

ELECTRICAL EQUIPMENT SCHEDULE

ITEM	QTY	DESCRIPTION
1 LIGHT FIXTURE	7	LITHONIA DM240-120 V W/2 EACH F40 CW LAMPS
2 LIGHT FIXTURE	1	EGALE PORCELAIN RECEPTACLE 604
3 LIGHT FIXTURE	2	MANVILLE HOLOPHANE, WALLPACK II, 120 V W/100 W MERCURY LAMP PHOTOELECTRIC SWITCH
4 MOTOR LOUVER	1	12x12 CONCEALED MOTOR OPERATED LOUVER AIROLITE T663E WITH WALLMOUNTED THERMOSTAT, WEATHER SEALS AND INSECT SCREEN
5 UNIT HEATER	1	CHROMALOX 2.6 KW 1ø 240V LUH-02-21, WITH INTEGRAL THERMOSTAT AND WUH-04 MOUNTING BRACKET.
6 UNIT HEATER	1	CHROMALOX 5 KW 3ø 480V LUH-05-43, W/WUH-04 MOUNTING BRACKET AND LUH-TK2 THERMOSTAT
7 WATER HEATER	1	6 GALLON ELECTRIC WATER HEATER 120V
8 EXHAUST FAN	2	MOTORIZED EXHAUST FAN MIN 120 CFM MIN GREENHECK, PENN OR EQUAL MAX 10" BLADE
9 INTAKE LOUVER	1	MOTORIZED INTAKE LOUVER GREENHECK OR PENN OR EQUAL
GFI CONVENIENCE OUTLET	7	20 AMP DUPLEX GROUND FAULT INTERRUPTER HUBBELL GF-5362 W/BOX AND P-26
GFI WP CONVENIENCE OUTLET	1	20 AMP DUPLEX GROUND FAULT INTERRUPTER HUBBELL GF-5362 W/BOX AND HUBBELL 5222 LIFT COVER PLATE

ELECTRICAL SYMBOLS

- CEILING FIXTURE
- WALL FIXTURE
- FLOURESCENT FIXTURE
- S SINGLE POLE SWITCH
- GFI GROUND FAULT INTERRUPTER OUTLET
- GFI WP WEATHER PROOF GROUND FAULT INTERRRUPTER OUTLET
- (M) MOTOR
- (T) THERMOSTAT

WARNING
THIS DRAWING REDUCED
APPROX. ONE-HALF

PLOT SCALE 1=24

NO.	REVISIONS	BY	DATE

DRAWN _____ DATE CHECKED 3/91 DATE
DESIGNED 3/91 DATE PROJECT ENGINEER
APPROVED 3/91 DATE PROJECT MANAGER

CITY OF BELLEVUE,
IDAHO

FORSGREN ASSOCIATES / P.A.

WASTEWATER COLLECTION AND TREATMENT FACILITIES

CLORINATION-AERATION BUILDING ELECTRICAL

PROJECT NO. 89067

SHEET NO. T-8

REFLEC1

PANEL SCHEDULE

PANEL A — TYPE NQOB 1 ϕ 3 — WIRE 120/240 VOLTS — MOUNTING ☐ flush ☒ surface — REMARKS: MOUNT IN BLOWER ROOM — LOCATION DISINFECTION BUILDING 100 amp. main — ☐ lugs ☒ breaker

CIR. NO.	BREAKER amp	BREAKER pole	NO. OUTLETS ft's	NO. OUTLETS c.o.	NO. OUTLETS misc.	LOAD A	LOAD B	WIRE SIZE	CIRCUIT DESCRIPTION
1	20	1	4			640		12	BLOWER ROOM LIGHTS
2	20	1	4			580		12	UTIL RM/CHL.RM LIGTH
3	20	1		4			960	12	BLOWER ROOM OUTLETS
4	20	1		4			960	12	UTILITY ROOM OUTLETS
5	20	1			1	1500		12	WATER HEATER
6	15	1			1	100		10	EFFLUENT FLOW METER
7	15	1			1		200	8	INFLUENT FLOW METER
8	15	1			1		200	12	CHLOR LEAK DET LIGHT
9	15	1	2			150		12	YARD LIGHT
10	20				1	360		12	MOTORIZED FAN AND LOUVER
11	20				1		360	12	MOTORIZED LOUVER
12	20	1			2		450	12	EXHAUST FAN/INTAKE LOUVER CHLORINE ROOM
13-20									SPARE

AMPS/PHASE 27.7 26.0 — TOTALS 3330 3130 — AIC 10000

FEEDER WIRE SIZE 6 — INSUL THW — CONDUIT SIZE — — PARALLEL RUNS 1

MCC MOTOR CONTROL CENTER SCHEDULE / 22000 AIC

CUBICAL	DESCRIPTION	HP	VOLTS	PHASE	CONDUIT SIZE	CONT. V.	REMARKS
1	200 AMP GFI MAIN		480	3	300 MCM		GFI SHUNT TRIP
2	EFFLUENT PUMP	5	480	3	10	120	
3	BLOWER NO. 1	10	480	3	8	120	
4	BLOWER NO. 2	10	480	3	8	120	MOUNT IN PANEL DR
5	BLOWER NO. 3	10	480	3	8	120	
6	UNIT HEATERS (2)		480	3	10	120	
7	WELL PUMP	3	480	3	10	120	INSTALL IN MCC
8	7.5 KVA TRANSFORMER		120/240	1	6		
9	LIGHTING PANEL		120/240	1	4		INSTALL ON WALL

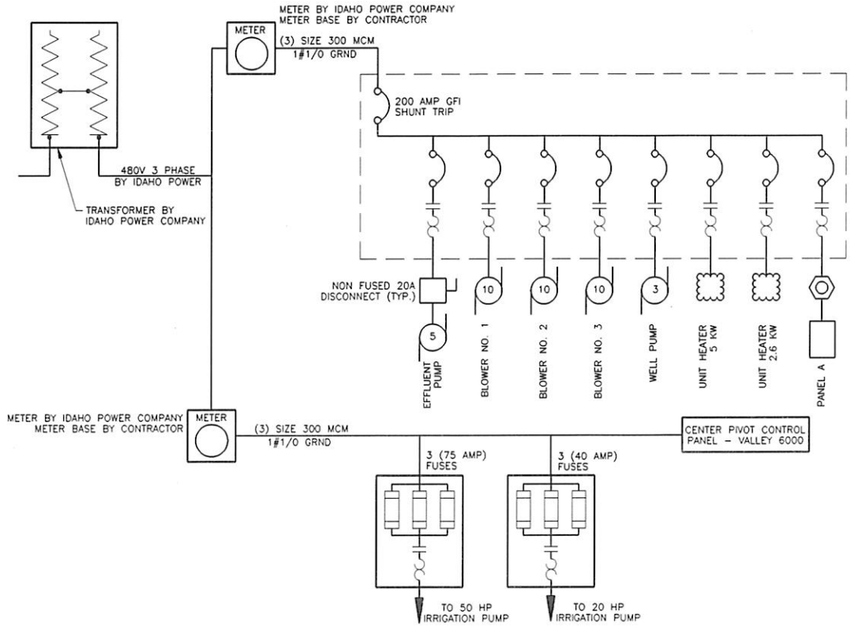

SYSTEM LINE DIAGRAM A

SPARE 20 & 30 AMP BREAKER	UNIT HEATER UNIT HEATER
10 HP BLOWER	WELL PUMP 3 HP
10 HP BLOWER	EFFLUENT PUMP 5 HP
10 HP BLOWER	7 KVA 480/240/120 TRANSFORMER
200 AMP MAIN BREAKER	SPACE

MOTOR CONTROL PANEL LAYOUT B

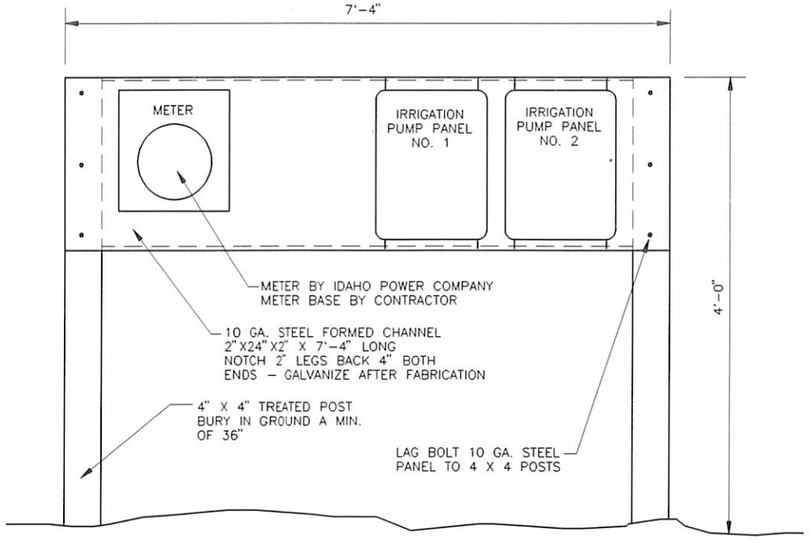

IRRIGATION PUMP & OUTLET STRUCTURE
ELECTRICAL PANEL MOUNTING DETAIL C

NOT TO SCALE

THE PROFESSIONAL ENGINEER REGISTERED 6394 STATE OF IDAHO WILLIAM BRYAN TEUSCHER

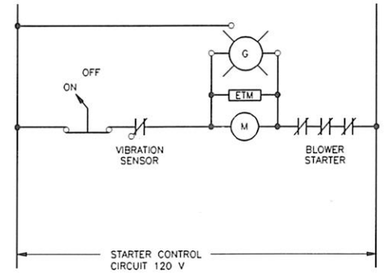

BLOWER CONTROL CIRCUIT TYPICAL D

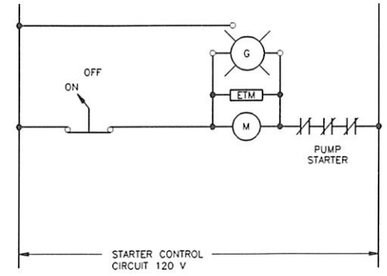

EFFLUENT PUMP FOR
RAPID INFILTRATION BASINS E

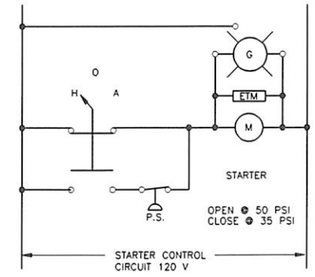

WELL PUMP CONTROL CIRCUIT F

WARNING
THIS DRAWING REDUCED
APPROX. ONE-HALF

PLOT SCALE 1=1

RELELEC2

NO.	REVISIONS	BY	DATE

DRAWN ____ DATE — CHECKED 3/31 DATE

DESIGNED 3/31 DATE — PROJECT ENGINEER

APPROVED 3/31 DATE — PROJECT MANAGER

CITY OF BELLEVUE,
IDAHO

FORSGREN ASSOCIATES / P.A.

WASTEWATER COLLECTION AND TREATMENT FACILITIES

CLORINATION-AERATION BUILDING ELECTRICAL

PROJECT NO. 89067

SHEET NO. T-9

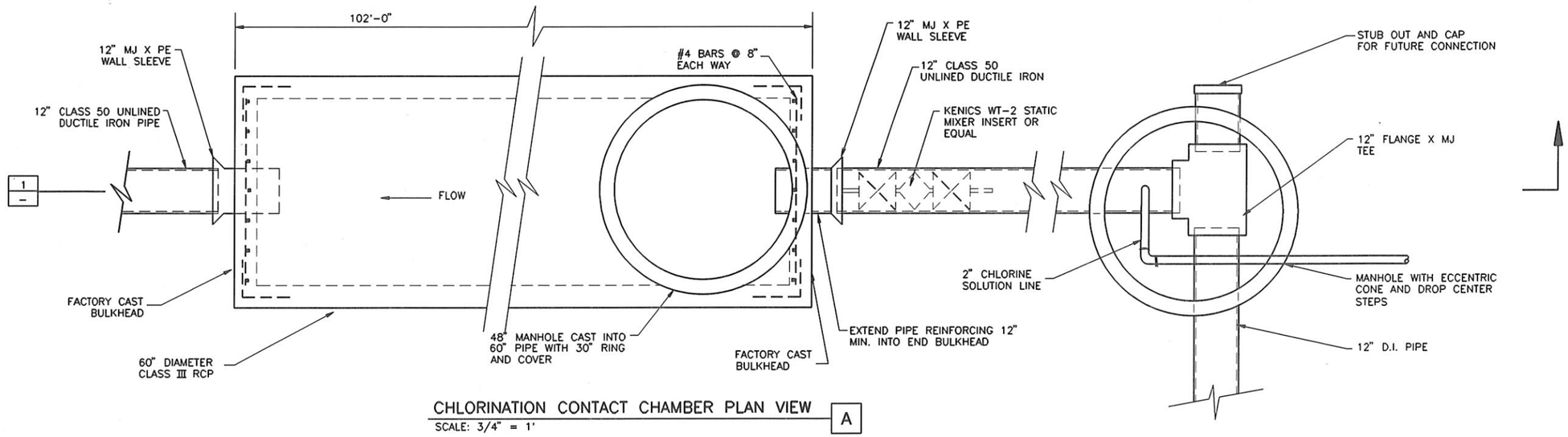

CHLORINATION CONTACT CHAMBER PLAN VIEW A

SCALE: 3/4" = 1'

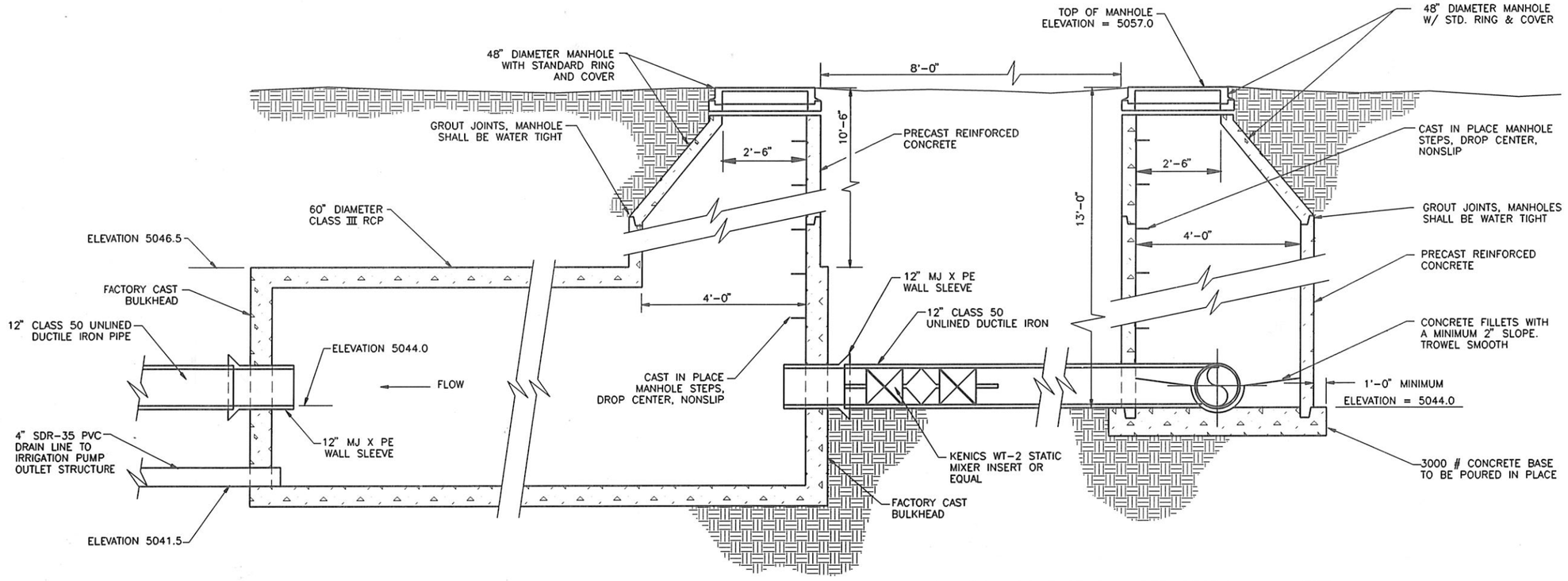

CHLORINATION CONTACT CHAMBER SECTION VIEW 1

SCALE: 3/4" = 1'

WARNING
THIS DRAWING REDUCED
APPROX. ONE-HALF

THE PROFESSIONAL ENGINEER REGISTERED 6394 STATE OF IDAHO WILLIAM BRYAN TEUSCHER

PLOT SCALE 1=16

BELCHLST

NO.	REVISIONS	BY	DATE

DRAWN MFF 1-91 DATE CHECKED 3/91 DATE

DESIGNED 3/91 DATE PROJECT ENGINEER

APPROVED 3/91 DATE PROJECT MANAGER

CITY OF BELLEVUE, IDAHO

FORSGREN ASSOCIATES / P.A.

WASTEWATER COLLECTION AND TREATMENT FACILITIES

CHLORINE CONTACT CHAMBER

PROJECT NO. 89067

SHEET NO. T-10

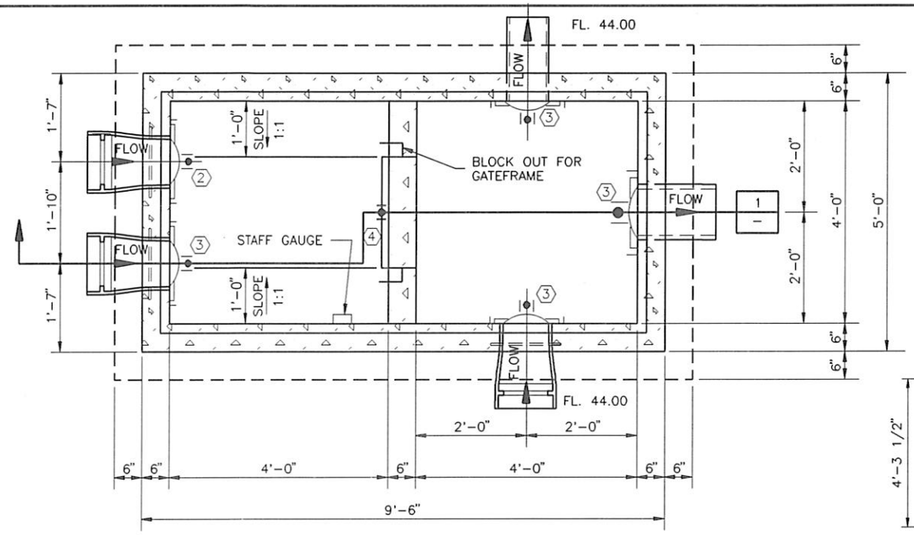

TRANSFER STRUCTURE TYPE 'A'
PLAN VIEW
SCALE: 3/4"=1'-0" A

NOTE: 1. ATTACH 2 X 6 PLANKS TO 2 X 4 BRACING WITH CARRIAGE BOLTS.
2. ALL DIMENSIONS FOR REFERENCE ONLY. MEASURE TO FIT ON SITE.

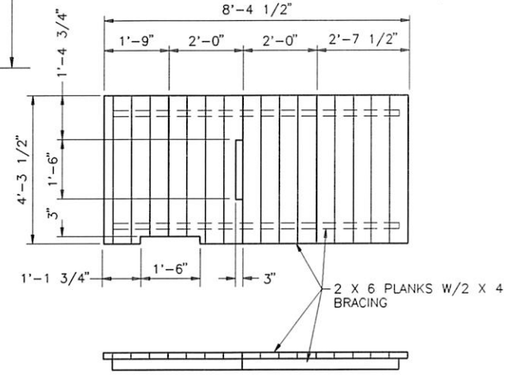

TYPICAL DECK DETAIL B
NOT TO SCALE

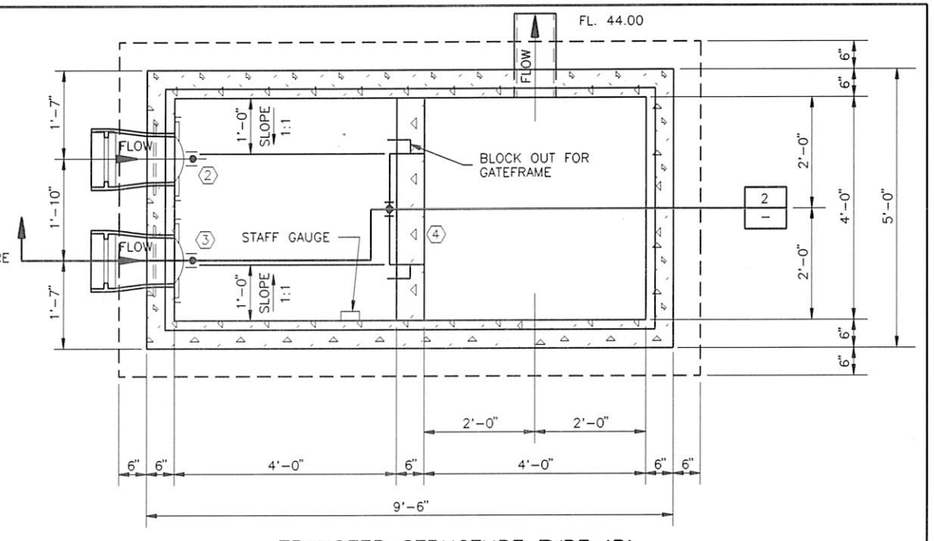

TRANSFER STRUCTURE TYPE 'B'
PLAN VIEW
SCALE: 3/4"=1'-0" C

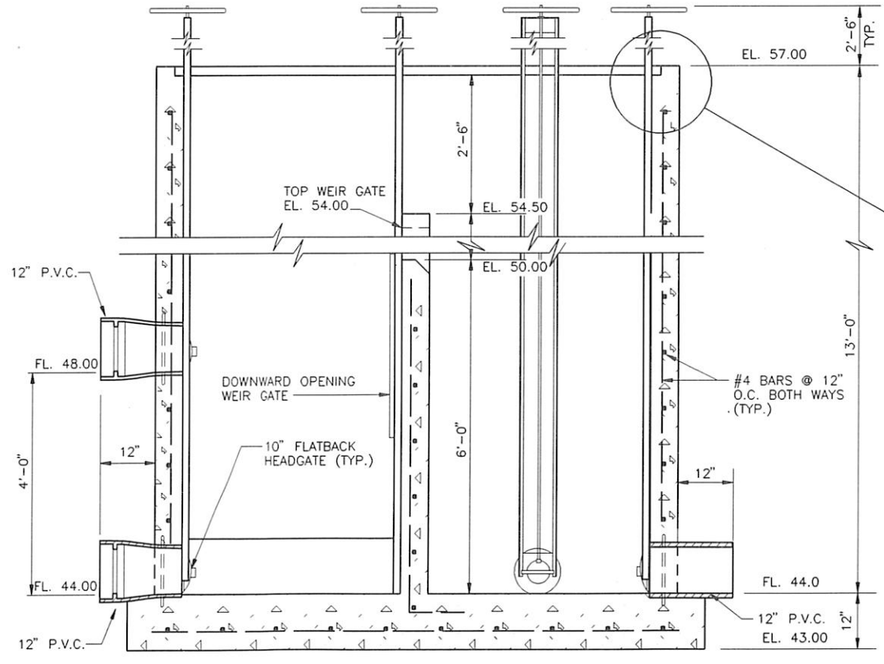

TRANSFER STRUCTURE TYPE 'A'
SECTION VIEW
SCALE: 3/4"=1'-0" 1

GENERAL NOTES:
1. ALL CONCRETE STRUCTURES ARE TO BE CAST IN PLACE. A PRECAST ALTERNATIVE WILL NOT BE ALLOWED.

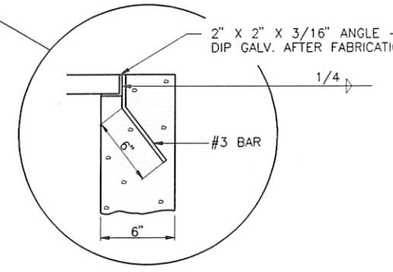

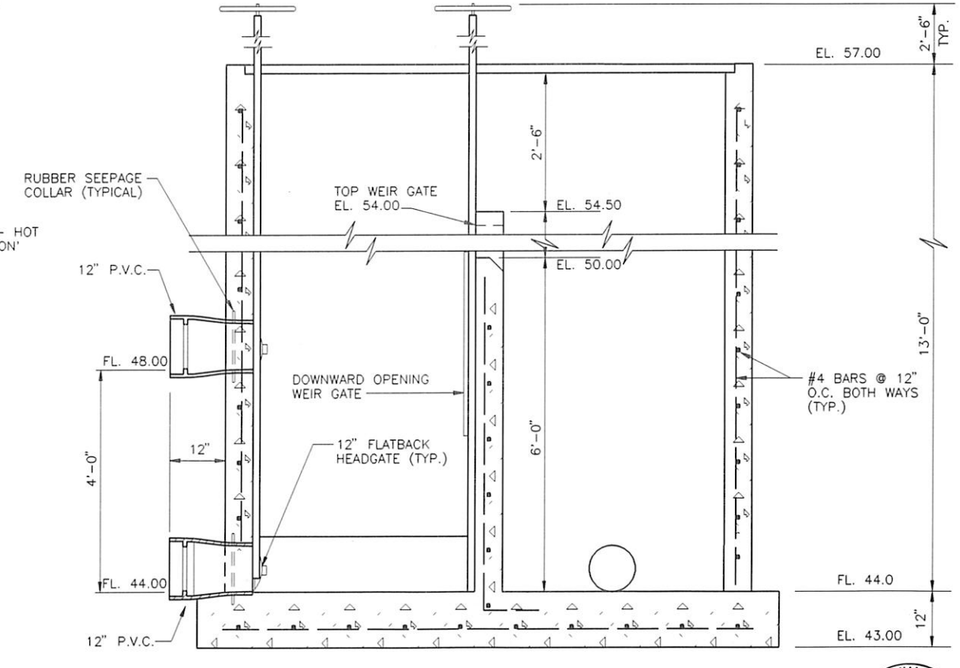

TRANSFER STRUCTURE TYPE 'B'
SECTION VIEW
SCALE: 3/4"=1'-0" 2

WARNING
THIS DRAWING REDUCED APPROX. ONE-HALF

PROFESSIONAL ENGINEER REGISTERED 6394 STATE OF IDAHO WILLIAM BRYAN TEUSCHER

PLOT SCALE 1=16
BELTRANS

NO.	REVISIONS	BY	DATE

DRAWN 7/89 JLT DATE CHECKED 3/91 DATE
DESIGNED 3/91 DATE PROJECT ENGINEER
APPROVED 3/91 DATE PROJECT MANAGER

CITY OF BELLEVUE, IDAHO

FORSGREN ASSOCIATES / P.A.

WASTEWATER COLLECTION AND TREATMENT FACILITIES

TRANSFER STRUCTURES A & B

PROJECT NO. 89067

SHEET NO. T-11

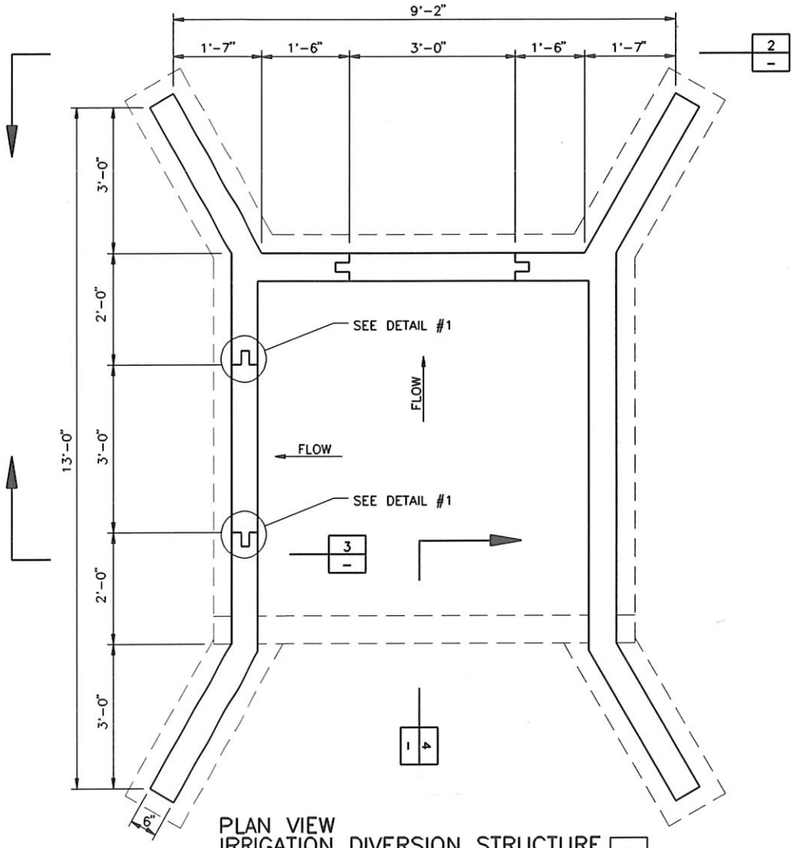

PLAN VIEW
IRRIGATION DIVERSION STRUCTURE A
SCALE: 3/4" = 1'-0"

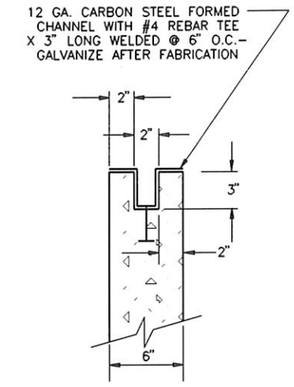

DETAIL 1
NOT TO SCALE

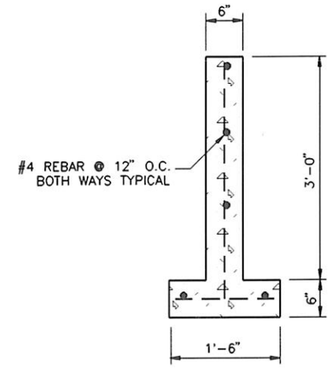

SECTION 3
SCALE: 1"=1'-0"

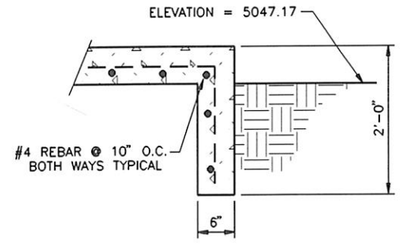

SECTION 4
SCALE: 1"=1'-0"

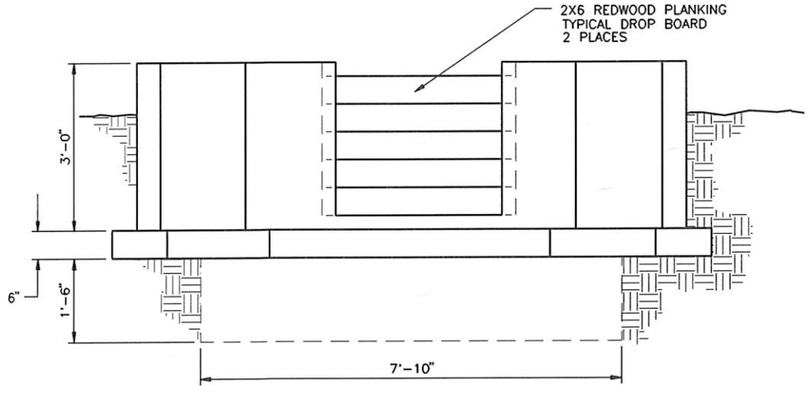

SECTION 2
SCALE: 3/4" = 1'-0"

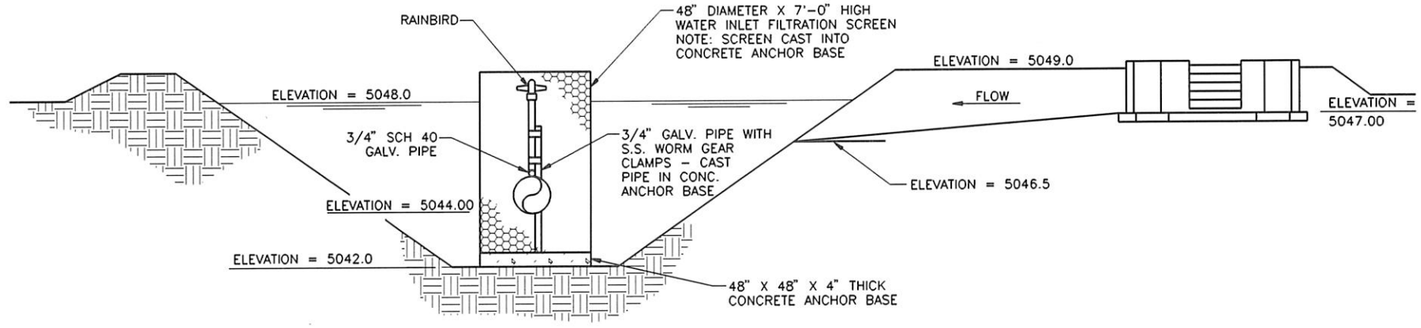

SECTION 5
NOT TO SCALE

WARNING
THIS DRAWING REDUCED APPROX. ONE-HALF

THE PROFESSIONAL ENGINEER REGISTERED 6394 STATE OF IDAHO 3/91 WILLIAM BRYAN TEUSCHER

PLOT SCALE 1=12

BELIRRST

NO.	REVISIONS	BY	DATE

DRAWN MFF 1-91 DATE CHECKED 3/91 DATE
DESIGNED 3/91 DATE PROJECT ENGINEER
APPROVED 3/91 DATE PROJECT MANAGER

CITY OF BELLEVUE, IDAHO

FORSGREN ASSOCIATES / P.A.

WASTEWATER COLLECTION AND TREATMENT FACILITIES

WATER DIVERSION STRUCTURE DETAILS

PROJECT NO. 89067

SHEET NO. T-12

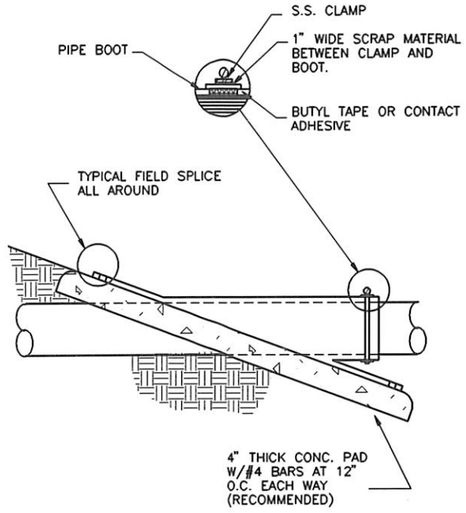

PVC LINER PIPE ANCHOR DETAIL — A
NOT TO SCALE

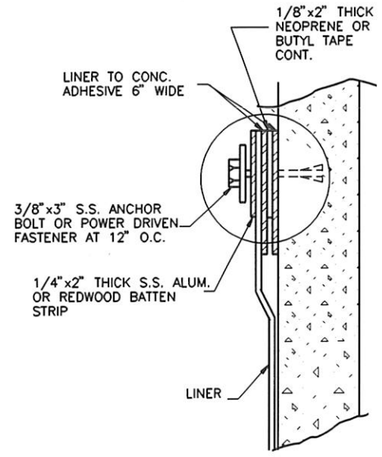

PVC LINER STRUCTURE DETAIL — B
NOT TO SCALE

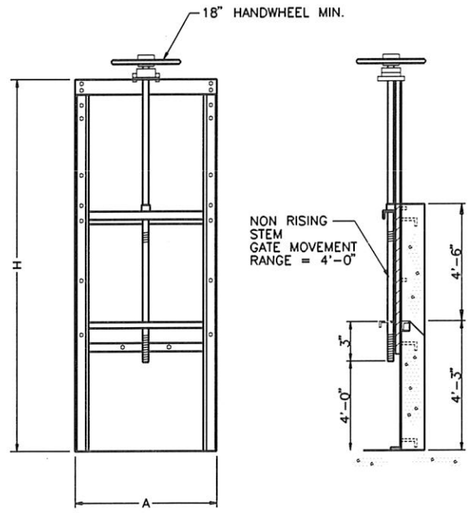

DOWNWARD OPENING WEIR GATE DETAIL — C
NOT TO SCALE

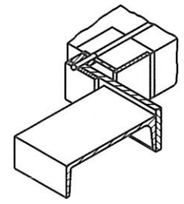

WEIR GATE SIDE SECTION — 1
NOT TO SCALE

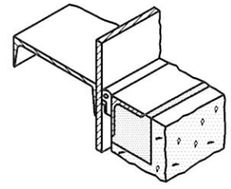

WEIR GATE BOTTOM SECTION — 2
NOT TO SCALE

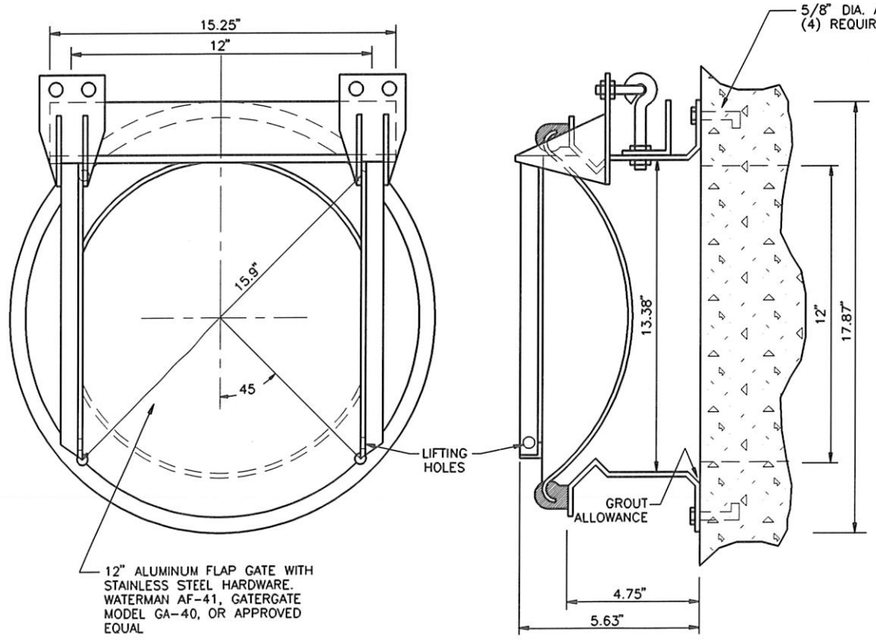

FLAP GATE DETAIL — D
NOT TO SCALE

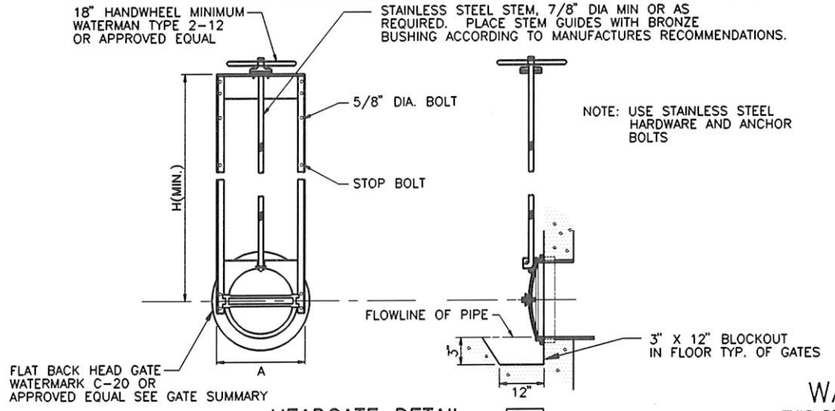

HEADGATE DETAIL — E
NOT TO SCALE

WARNING
THIS DRAWING REDUCED APPROX. ONE-HALF

HEADGATE SCHEDULE

GATE TYPE	QTY.	LOCATION	TYPE	SIZE	MIN. FRAME HEIGHT (H)	MAX. GATE WIDTH (A)	MATERIAL COMBINATION
1	2	INLET STRUCTURE	FLATBACK SLUICE GATE	12"		14.5"	SEE SPEC.
2	2	TRANSFER STRUCTURE A & B	FLATBACK SLUICE GATE	12"	11'-6"	14.5"	"
3	5	TRANSFER STRUCTURE A & B	FLATBACK SLUICE GATE	12"	15'-6"	14.5"	"
4	1	TRANSFER STRUCTURE A & B	DOWNWARD OPENING WEIR	24"	15'-0"	29"	"
5	2	IRRIGATION PUMP & OUTLET STRUCTURE	FLATBACK SLUICE GATE	12"	15'-6"	14.5"	"
6	2	IRRIGATION PUMP & OUTLET STRUCTURE	FLATBACK FLAP GATE	12"	N/A	11.13"	ALUMINUM WITH S.S. HARDWARE
7	4	TRANSFER STRUCTURE C	FLATBACK SLUICE GATE	12"	15'-6"	14.5"	SEE SPEC.

PROFESSIONAL ENGINEER REGISTERED 6394 STATE OF IDAHO WILLIAM BRYAN TEUSCHER 3/91

PLOT SCALE 1=1
BELMISC1

NO.	REVISIONS	BY	DATE

DRAWN 7/89 JLT DATE — CHECKED 3/91 DATE
DESIGNED 3/91 DATE — PROJECT ENGINEER
APPROVED 4/91 DATE — PROJECT MANAGER

CITY OF BELLEVUE, IDAHO

FORSGREN ASSOCIATES / P.A.

WASTEWATER COLLECTION AND TREATMENT FACILITIES

MISC. STRUCTURE DETAILS

PROJECT NO. 89067

SHEET NO. T-13

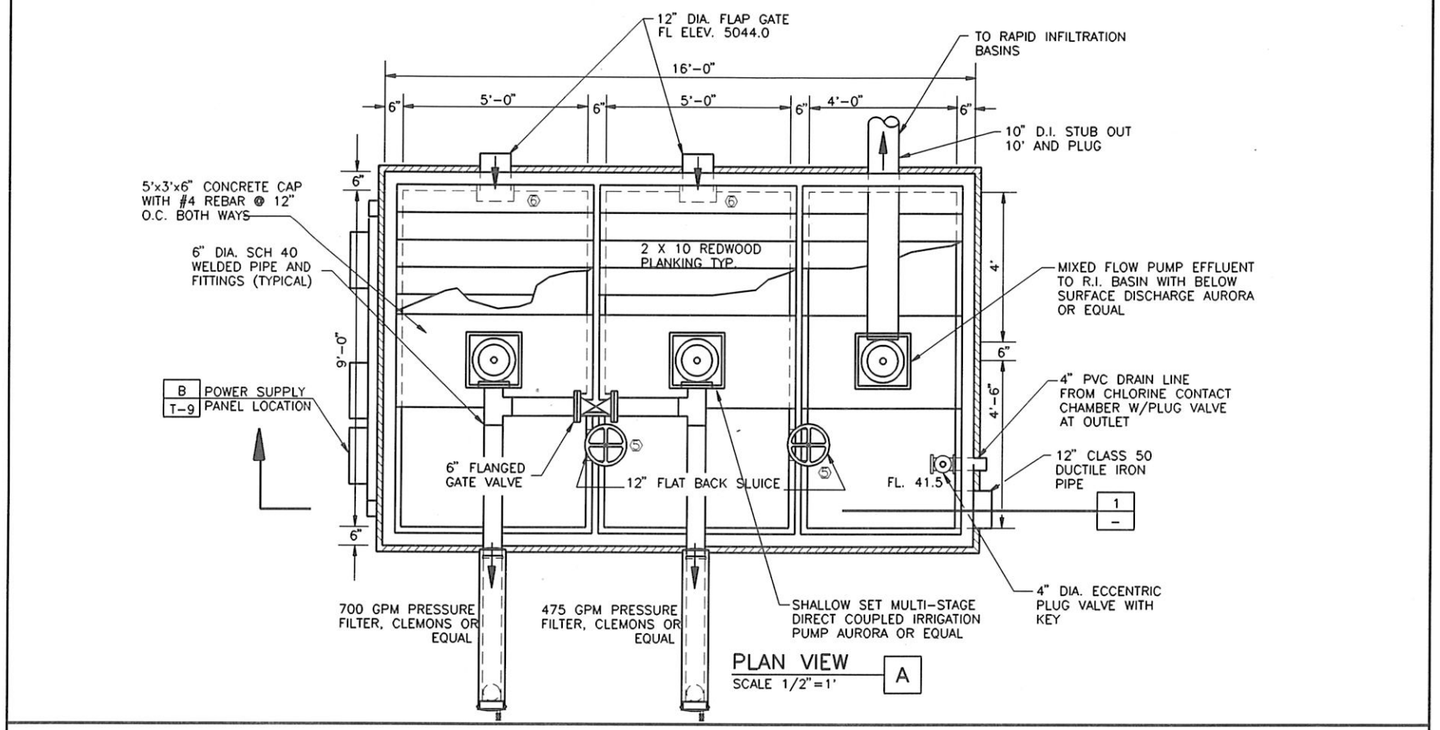

PLAN VIEW
SCALE 1/2"=1' A

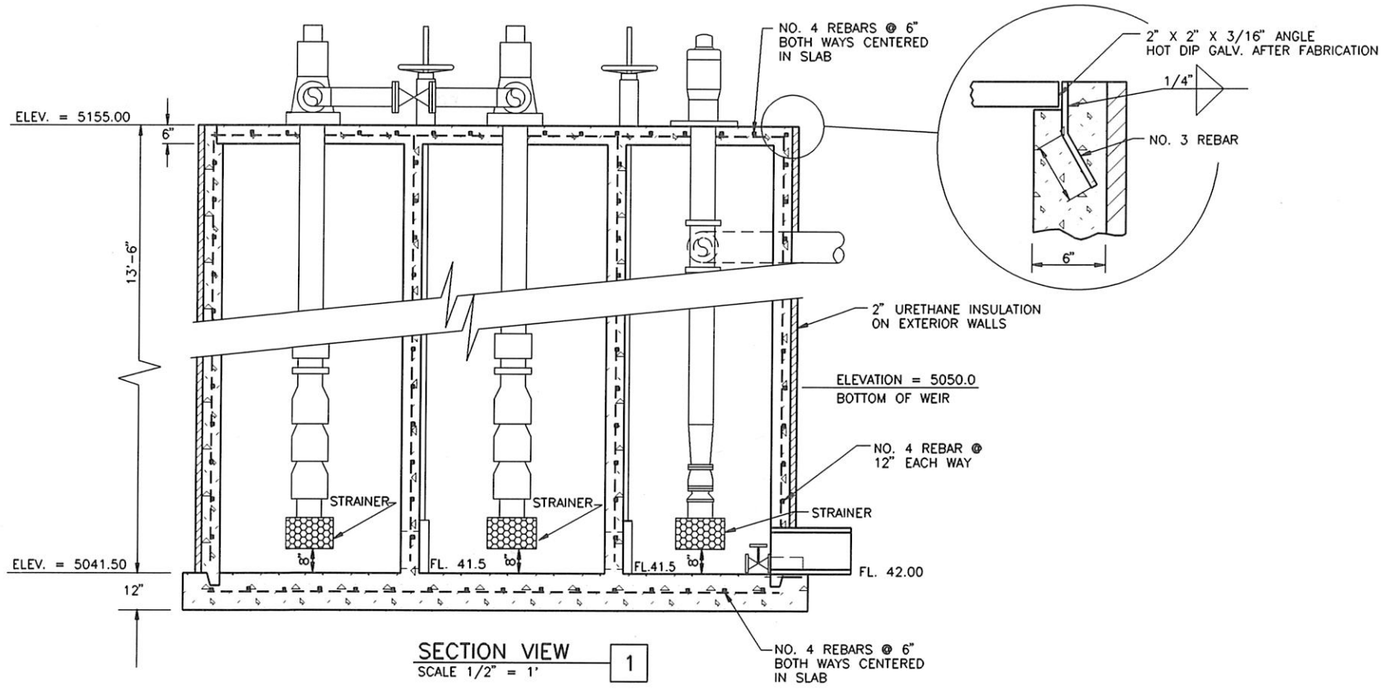

SECTION VIEW
SCALE 1/2" = 1' 1

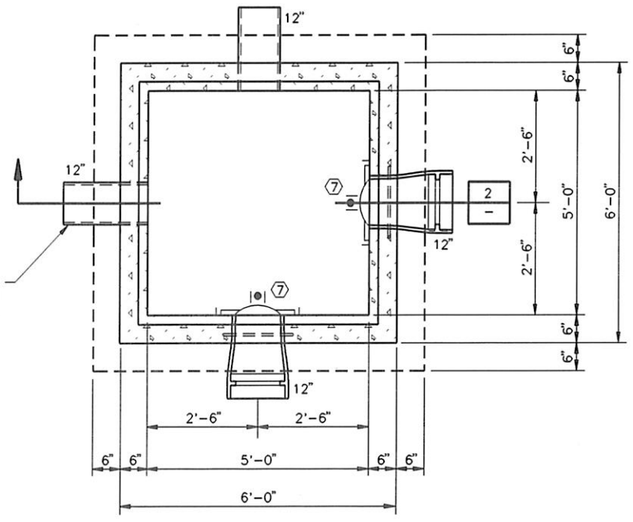

TRANSFER STRUCTURE TYPE 'C'
PLAN VIEW
NOT TO SCALE B

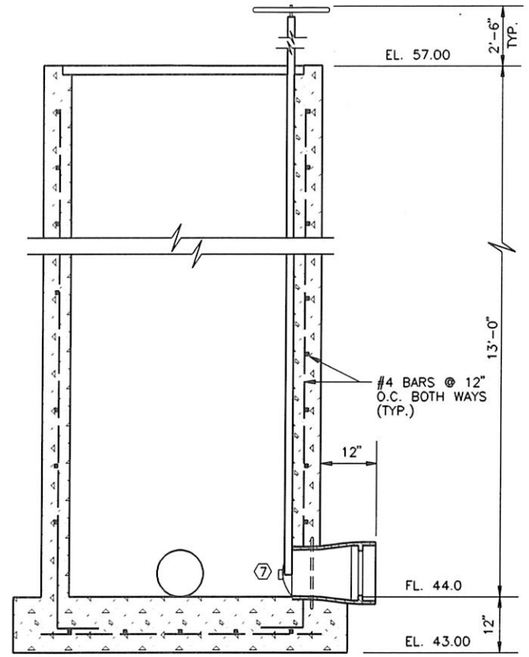

WARNING
THIS DRAWING REDUCED APPROX. ONE-HALF

TRANSFER STRUCTURE TYPE 'C'
SECTION VIEW
NOT TO SCALE 2

REGISTERED PROFESSIONAL ENGINEER
6394
3/91
STATE OF IDAHO
WILLIAM BRYAN TEUSCHER

PLOT SCALE 1=24

NO.	REVISIONS	BY	DATE

DRAWN 12/90 MFF DATE CHECKED 3/91 DATE
DESIGNED 3/91 DATE PROJECT ENGINEER
APPROVED 3/91 DATE PROJECT MANAGER

CITY OF BELLEVUE, IDAHO

FORSGREN ASSOCIATES / P.A.

WASTEWATER COLLECTION AND TREATMENT FACILITIES

IRRIGATION PUMP & OUTLET STRUCTURE DETAILS

PROJECT NO. 89067

SHEET NO. T-14

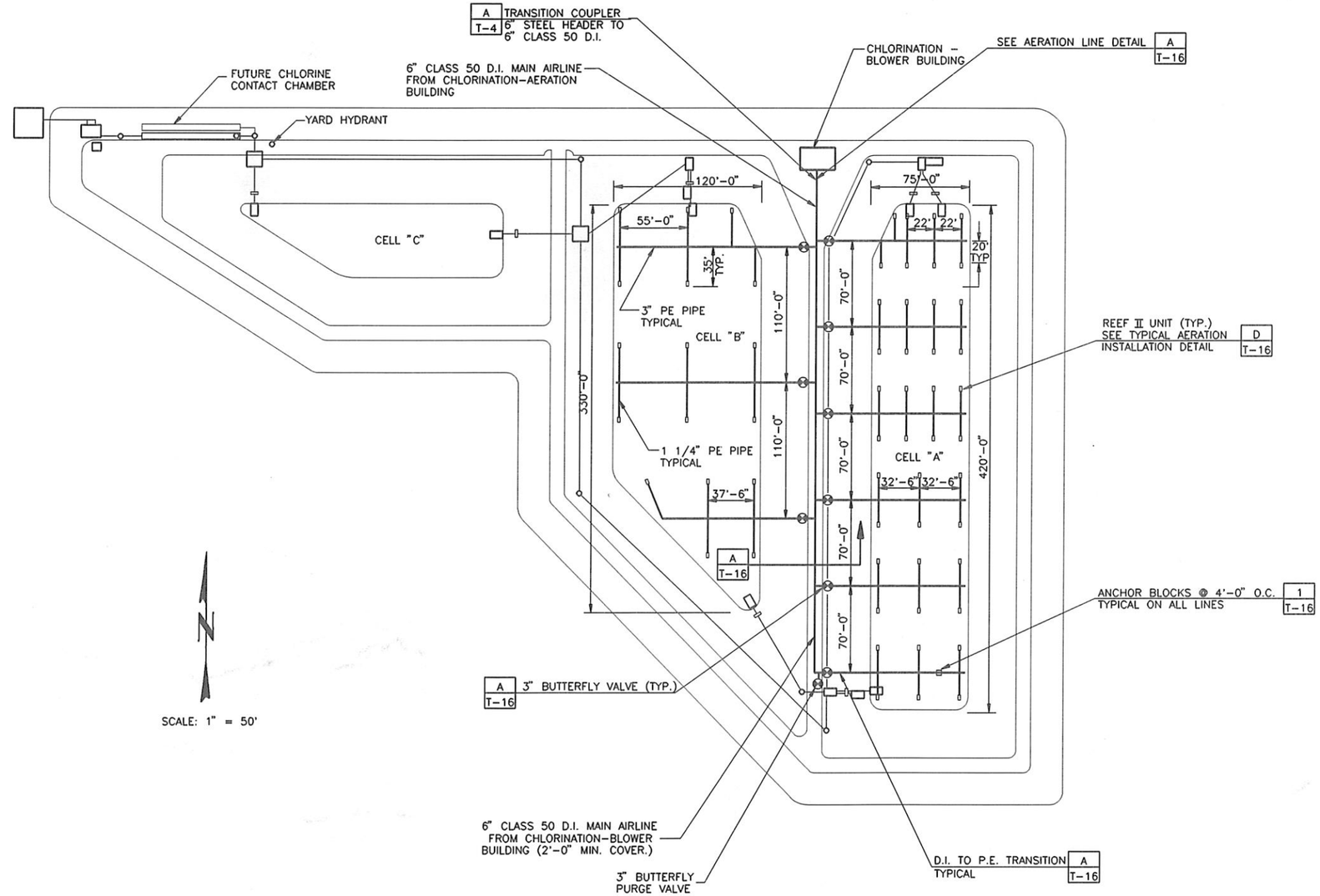

WARNING
THIS DRAWING REDUCED
APPROX. ONE-HALF

PROFESSIONAL ENGINEER REGISTERED 6394 STATE OF IDAHO WILLIAM BRYAN TEUSCHER 3/91

PLOT SCALE 1=50

NO.	REVISIONS	BY	DATE

DRAWN MFF 1-91 DATE CHECKED DATE
DESIGNED 3/91 DATE PROJECT ENGINEER
APPROVED 4/91 DATE PROJECT MANAGER

CITY OF BELLEVUE, IDAHO

FORSGREN ASSOCIATES / P.A.

WASTEWATER COLLECTION AND TREATMENT FACILITIES

AERATION SYSTEM LAYOUT

PROJECT NO. 89067

SHEET NO. T-15

BELAERSY

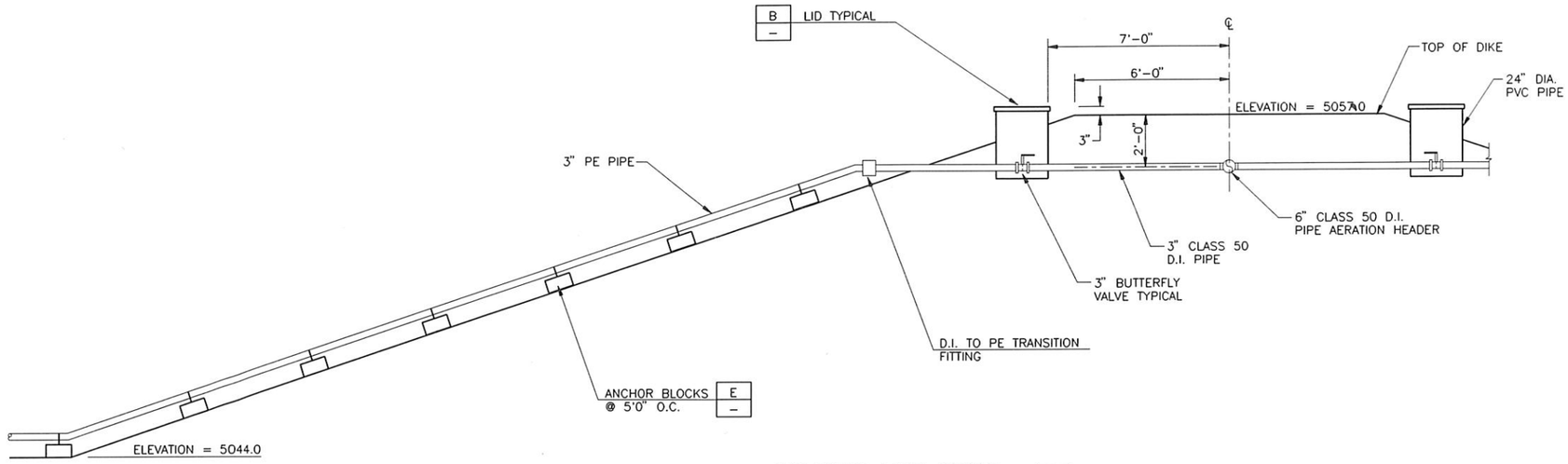

AERATION LINE DETAIL — A
SCALE: 3/8" = 1'-0"

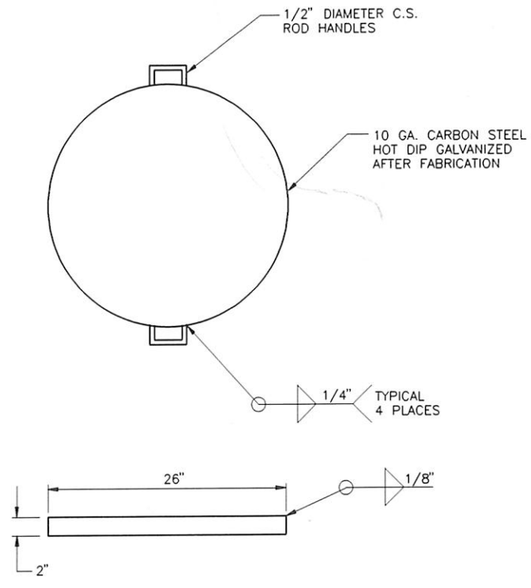

LID DETAIL — B
NOT TO SCALE

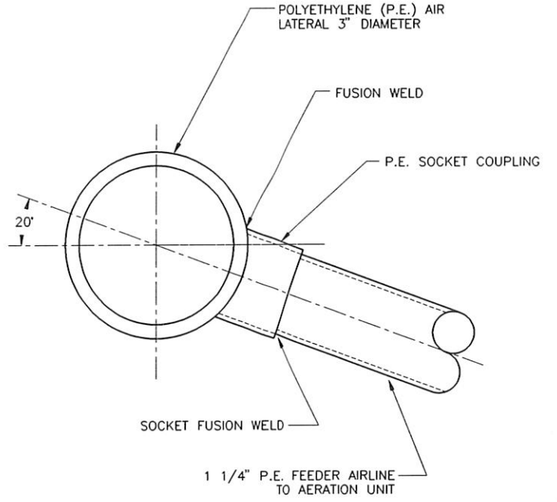

TEE CONNECTION DETAIL — C
NOT TO SCALE

NOTES:

1. AIR LINE SINKER WEIGHT
DRY WEIGHT = 15 POUNDS
SUBMERGED WEIGHT = 9 POUNDS

2. NUMBER OF SINKERS REQUIRED PER BRANCH LINE = 1

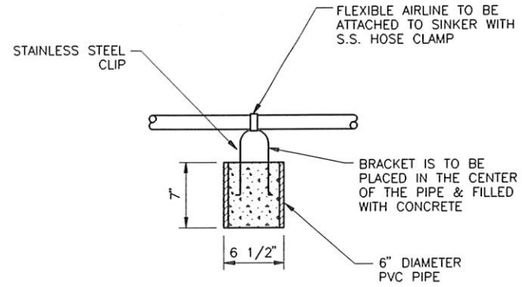

AIR LINE SINKER DETAIL — D
NOT TO SCALE

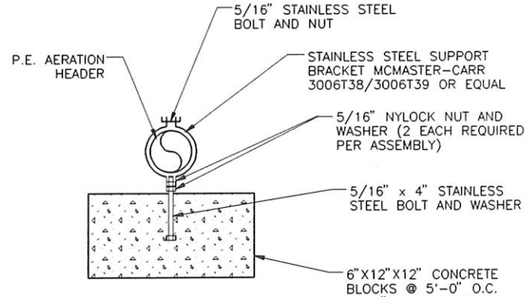

ANCHOR BLOCK DETAIL — E
NOT TO SCALE

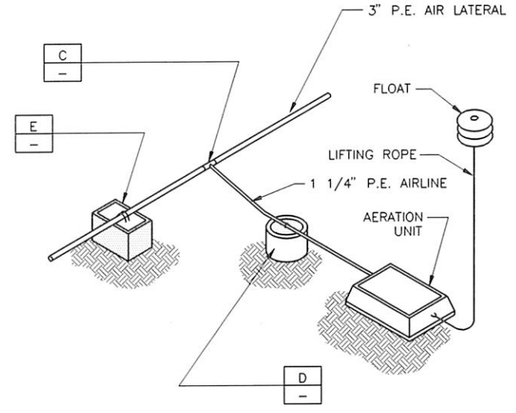

TYPICAL AERATOR INSTALLATION DETAIL — F
NOT TO SCALE

WARNING
THIS DRAWING REDUCED APPROX. ONE-HALF

PROFESSIONAL ENGINEER REGISTERED 6394 STATE OF IDAHO WILLIAM BRYAN TEUSCHER 3/9/91

PLOT SCALE 1=16

BELAERS2

NO.	REVISIONS	BY	DATE

DRAWN MFF 1-91 DATE — CHECKED 3/9/91 DATE
DESIGNED 3/91 DATE — PROJECT ENGINEER
APPROVED 3/91 DATE — PROJECT MANAGER

CITY OF BELLEVUE, IDAHO

FORSGREN ASSOCIATES / P.A.

WASTEWATER COLLECTION AND TREATMENT FACILITIES

AERATION DETAILS

PROJECT NO. 89067

SHEET NO. T-16

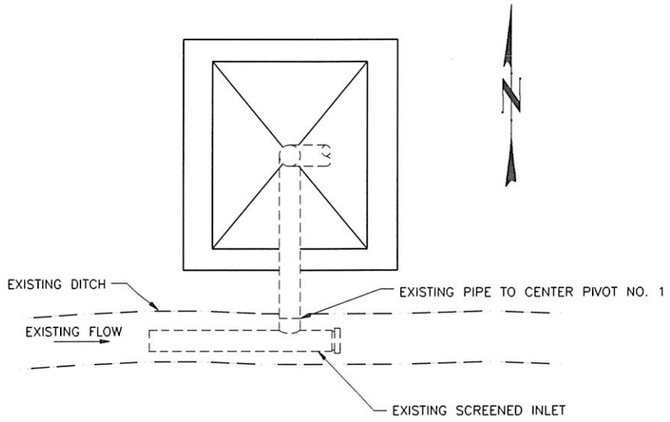

EXISTING
NOT TO SCALE

EXISTING CENTER PIVOT LAYOUT A
NOT TO SCALE

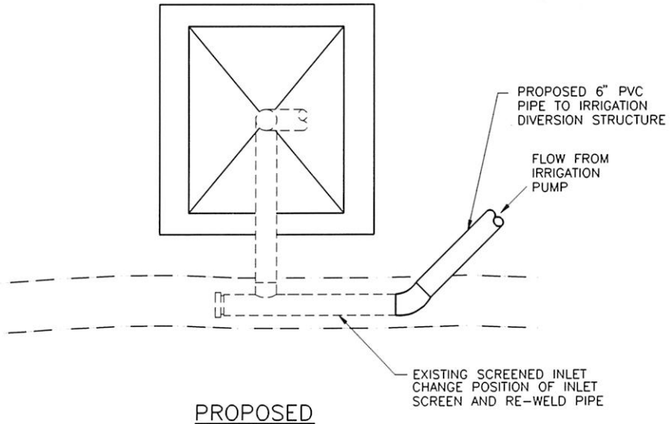

PROPOSED
NOT TO SCALE

EXISTING CENTER PIVOT PROPOSED TIE-IN DETAIL B
NOT TO SCALE

WARNING
THIS DRAWING REDUCED
APPROX. ONE-HALF

REGISTERED PROFESSIONAL ENGINEER
6394
3/91
STATE OF IDAHO
WILLIAM BRYAN TEUSCHER

PLOT SCALE 1=1

NO.	REVISIONS	BY	DATE

DRAWN MFF 1/91 DATE CHECKED 3/91 DATE
DESIGNED 3/91 DATE PROJECT ENGINEER
APPROVED 3/91 DATE PROJECT MANAGER

CITY OF BELLEVUE,
IDAHO

FORSGREN ASSOCIATES / P.A.

WASTEWATER COLLECTION AND TREATMENT FACILITIES

CENTER PIVOT CONNECTION DETAILS

PROJECT NO. 89067

SHEET NO. T-17

BEL/RIBAS

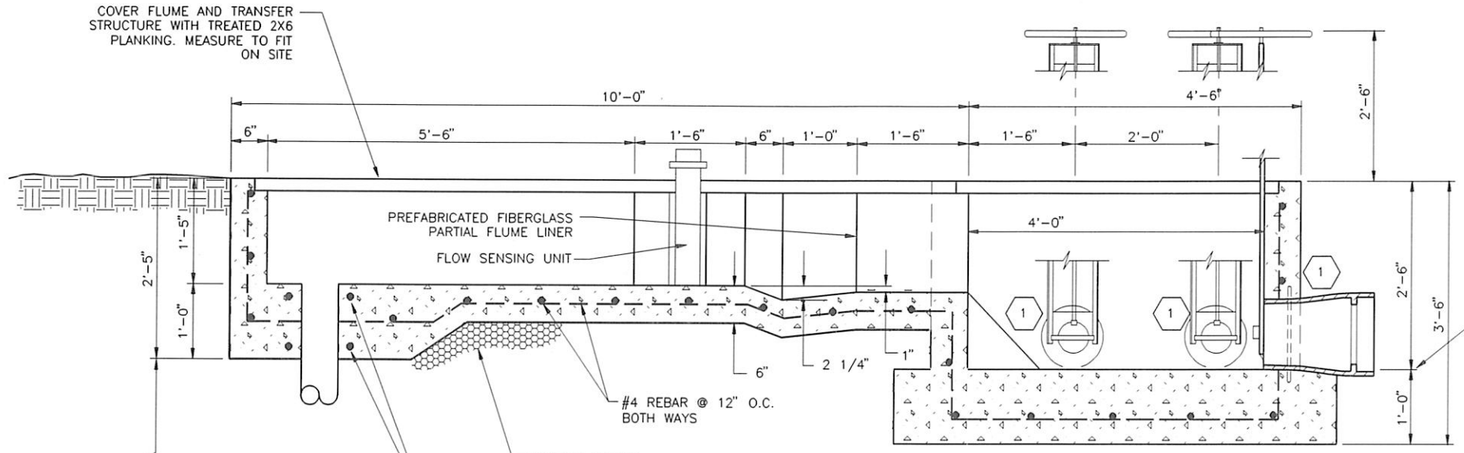

SECTION 1
SCALE: 1" = 1'-0"

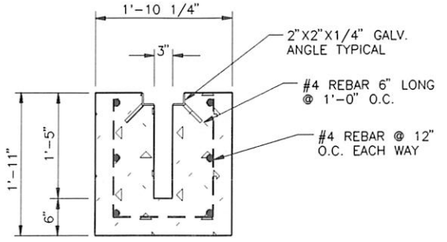

SECTION 2
SCALE: 1" =1'-0"

FLOW CHART PARSHALL FLUME

HEAD FT.	3 IN. CFS	3 IN. MGD	HEAD FT.	3 IN. CFS	3 IN. MGD	HEAD FT.	3 IN. CFS	3 IN. MGD	HEAD FT.	3 IN. CFS	3 IN. MGD	HEAD FT.	3 IN. CFS	3 IN. MGD
.50	.339	.219	.60	.450	.291	.70	.571	.369	.80	.702	.454	.90	.843	.545
.51	.350	.226	.61	.462	.299	.71	.584	.377	.81	.716	.463	.91	.857	.554
.52	.361	.233	.62	.474	.306	.72	.597	.386	.82	.730	.472	.92	.872	.564
.53	.372	.240	.63	.485	.313	.73	.610	.394	.83	.744	.481	.93	.887	.573
.54	.382	.247	.64	.497	.321	.74	.623	.403	.84	.757	.489	.94	.901	.582
.55	.393	.254	.65	.509	.329	.75	.636	.411	.85	.771	.498	.95	.916	.592
.56	.405	.262	.66	.522	.337	.76	.649	.419	.86	.786	.508	.96	.931	.602
.57	.416	.269	.67	.534	.345	.77	.662	.428	.87	.800	.517	.99	.946	.611
.58	.427	.276	.68	.546	.353	.78	.675	.436	.88	.814	.526	.98	.961	.621
.59	.439	.284	.69	.559	.361	.79	.689	.445	.89	.828	.535	.99	.977	.631

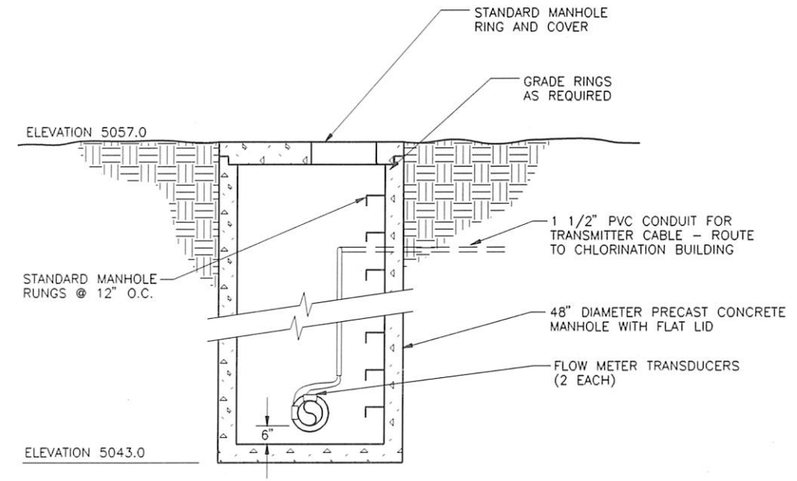

SECTION 3
NOT TO SCALE

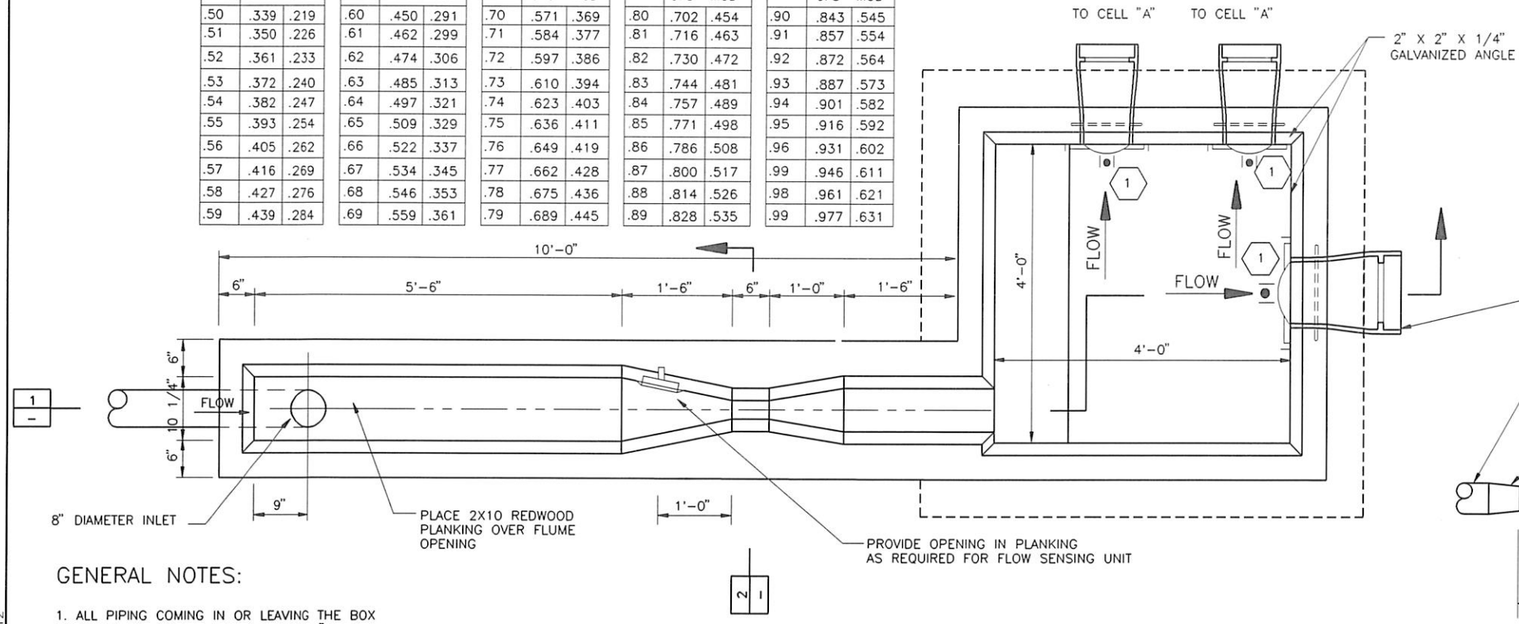

INFLUENT METER AND INLET STRUCTURE
SCALE: 1" = 1'-0"

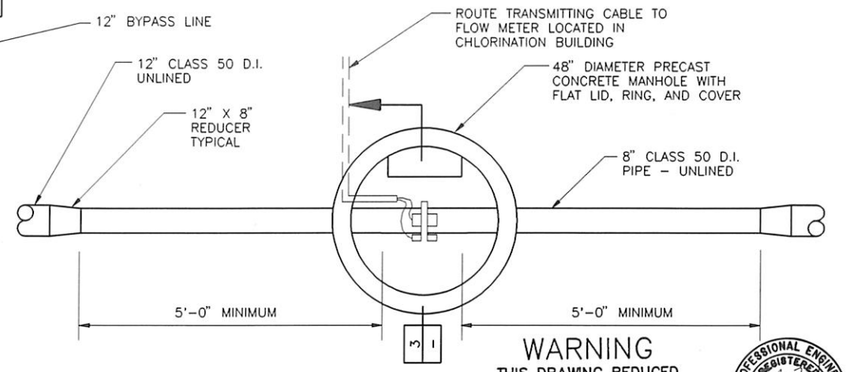

WARNING
THIS DRAWING REDUCED APPROX. ONE-HALF

EFFLUENT METERING DETAIL
NOT TO SCALE

GENERAL NOTES:

1. ALL PIPING COMING IN OR LEAVING THE BOX SHALL HAVE A PIPE JOINT WITHIN 24" OF THE OUTSIDE WALL SURFACE.
2. REPAIR WELDS OR CUT EDGES ON GALVANIZED MATERIALS WITH GALVOLLY HOT MELT.

WILLIAM BRYAN TEUSCHER — REGISTERED PROFESSIONAL ENGINEER — 6394 — STATE OF IDAHO

BELINFST PLOT SCALE 1=12

NO.	REVISIONS	BY	DATE

DRAWN MFF 1-91 DATE — CHECKED 3/91 DATE
DESIGNED 3/91 DATE — PROJECT ENGINEER
APPROVED 3/91 DATE — PROJECT MANAGER

CITY OF BELLEVUE, IDAHO

FORSGREN ASSOCIATES / P.A.

WASTEWATER COLLECTION & TREATMENT FACILITIES

INFLUENT METERING FLUME STRUCTURE

PROJECT NO. 89067

SHEET NO. T-18

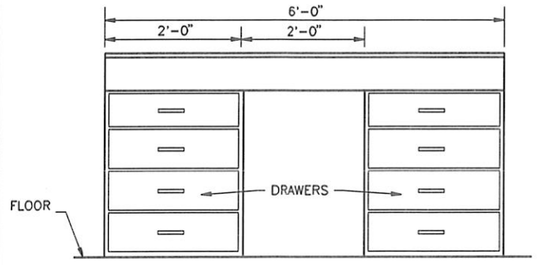

ELEVATION

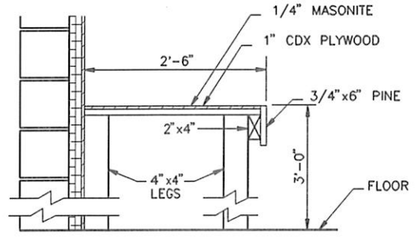

WORK BENCH DETAIL A
NOT TO SCALE

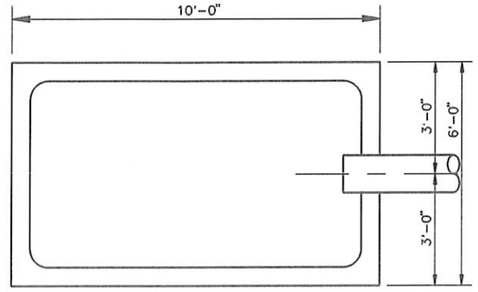

PLAN

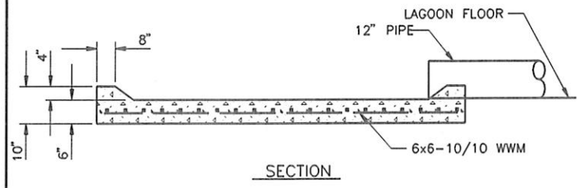

SECTION

SPLASH PAD B
NOT TO SCALE

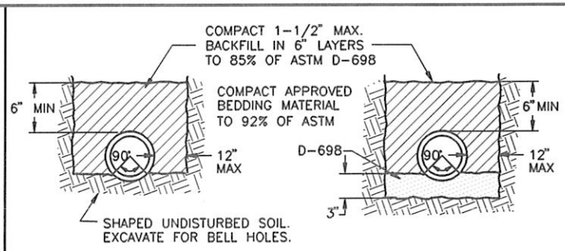

PIPE BEDDING FOR RIGID PIPE

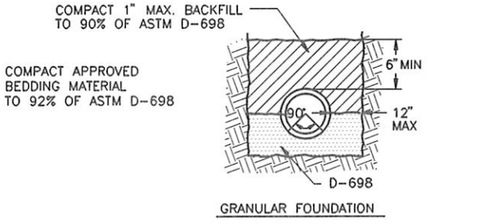

PIPE BEDDING DETAIL FOR FLEXIBLE PIPE

PIPE BEDDING DETAILS C
NOT TO SCALE

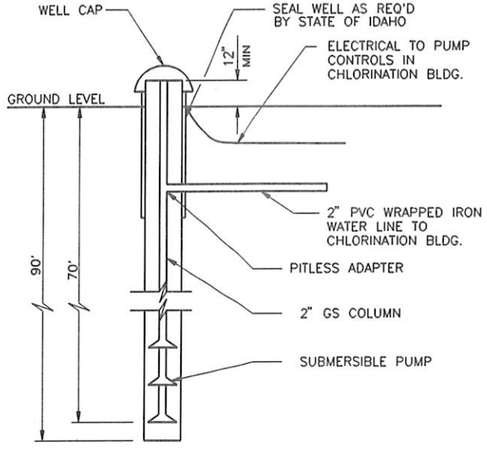

WELL PUMP DETAIL E
NOT TO SCALE

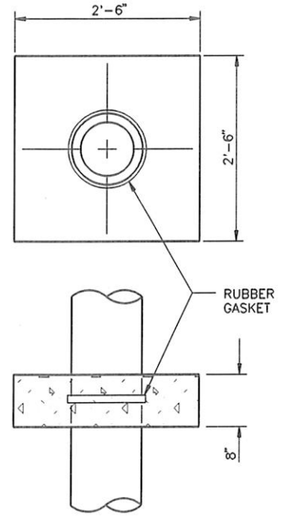

CONC. CUT-OFF COLLAR F
NOT TO SCALE

NOTE:
CONCRETE COLLARS SHALL BE CONSTRUCTED ON ALL PIPES THAT PASS THROUGH ANY DIKES BELOW THE HIGH WATER LINE. ONE COLLAR SHALL BE CONSTRUCTED ON EACH SIDE OF TRANSFER STRUCTURES.

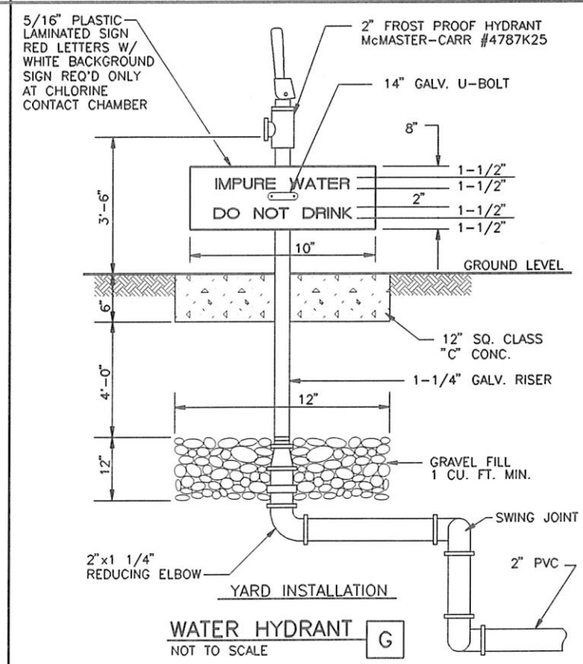

WATER HYDRANT G
NOT TO SCALE

NOTE: SIGN SHOWN ROTATED 90° OFF TRUE POSITION. SIGN SHALL BE REMOUNTED FOR EASY READING.

WARNING
THIS DRAWING REDUCED APPROX. ONE-HALF

PROFESSIONAL ENGINEER REGISTERED 6394 STATE OF IDAHO WILLIAM BRYAN TEUSCHER 5/91

BELMISC2 PLOT SCALE 1=1

NO.	REVISIONS	BY	DATE

DRAWN 7/89 JLT DATE — CHECKED 3/91 DATE
DESIGNED 3/91 DATE — PROJECT ENGINEER
APPROVED 3/91 DATE — PROJECT MANAGER

CITY OF BELLEVUE, IDAHO

FORSGREN ASSOCIATES / P.A.

WASTEWATER COLLECTION AND TREATMENT FACILITIES

MISCELLANEOUS DETAILS

PROJECT NO. 89067

SHEET NO. T-19

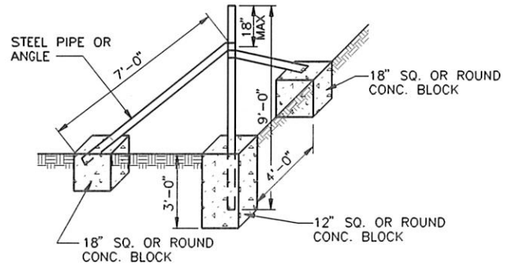

METAL CORNER BRACE
NOT TO SCALE

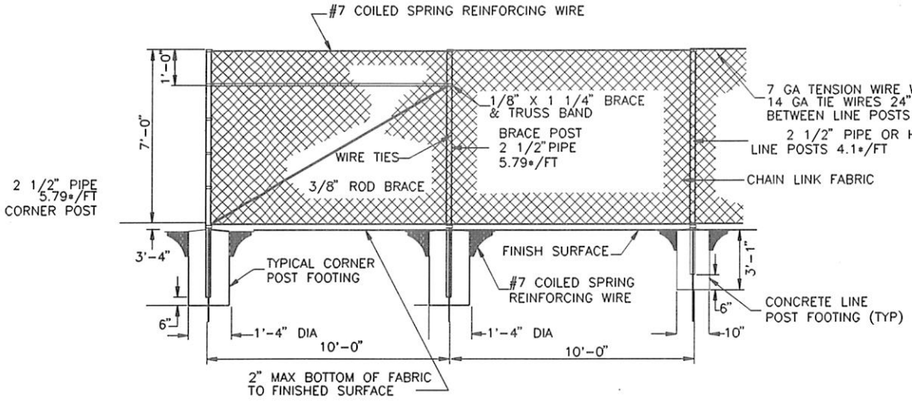

CHAIN LINK FENCE A
NOT TO SCALE

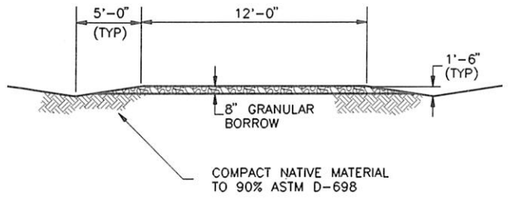

ACCESS ROAD C
NOT TO SCALE

NOTE:

1. GRADE EXISTING ROAD TO ALLOW DRAINAGE
2. ALIGNMENT TO BE STAKED IN THE FIELD BY THE ENGINEER

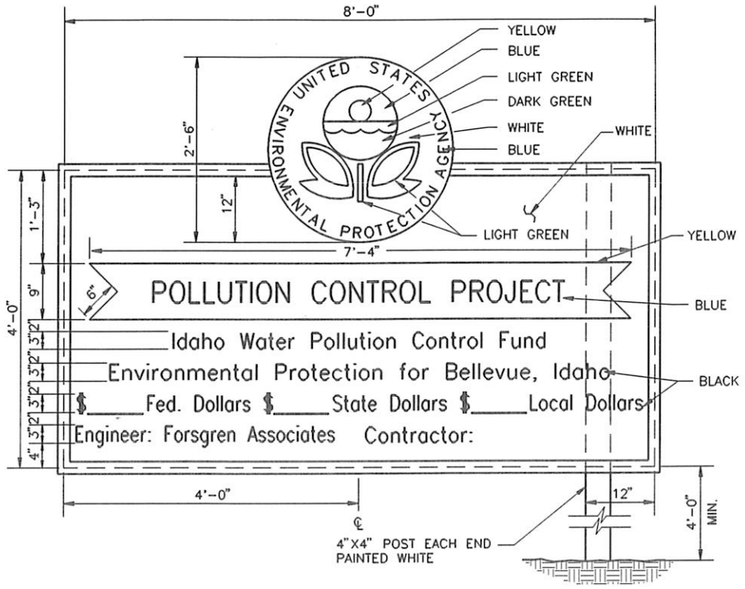

PROJECT SIGN B
NOT TO SCALE

NOTES FOR 4'-0" X 8'-0" SIGN:

1. ALL LINES SHALL BE KEPT IN VERTICAL ALIGNMENT AT LEFT BORDER OF SIGN. LEFT BORDER SHALL BE DETERMINED USING THE LONGEST LINE CENTERD ON THE SIGN PROVIDING EQUAL BORDERS. THE RIGHT BORDER FOR OTHER THAN LONGEST LINE SHALL VERY AS REQUIRED.
2. PROVIDE ADEQUATE SUPPORTS FOR SIGN AS SITE CONDITIONS MAY REQUIRE AND KEEP SIGN A PROPER DISTANCE ABOVE PREVAILING GRADE TO PERMIT PUBLIC VIEWING.
3. EXTERIOR TYPE HIGH DENSITY OVERLAID PLYWOOD OR OTHER APPROVED MATERIAL SUITABLE FOR SIGNS.
4. THE STYLE OF LETTERS AND SPACING SHALL BE IN ACCORDANCE WITH THOSE SHOWN.
5. DUPLICATE STANDARD "EPA" EMBLEM. THE LETTERING STYLE SHALL BE AS SHOWN.
6. SET EMBLEM ON EDGE TRIM OF SIGN. PROVIDE SUPPORTS FOR RIGID INSTALLATION.
7. DOLLAR FIGURES TO BE SUPPLIED BY ENGINEER AT START OF CONSTRUCTION.
8. COLOR NUMBERS REFER TO FEDERAL COLOR STANDARD NO. 595A (1-68) WHICH IS AVAILABLE FROM GSA SUPPLIED. FEDERAL COLOR NUMBERS FOR COLORS ARE:
   - A. WHITE - NO. 17886
   - B. BLUE - NO. 15180
   - C. YELLOW - NO. 13655
   - D. DARK GREEN - NO. 14090
   - E. LIGHT GREEN - 5 PARTS NO. 13655 & 1 PART NO. 15180
   - F. BLACK - NO. 17038
9. SALVAGE AND REMOVE SIGN AT COMPLETION OF WORK. GIVE TO OWNER FOR USE ON FUTURE PROJECT(S).

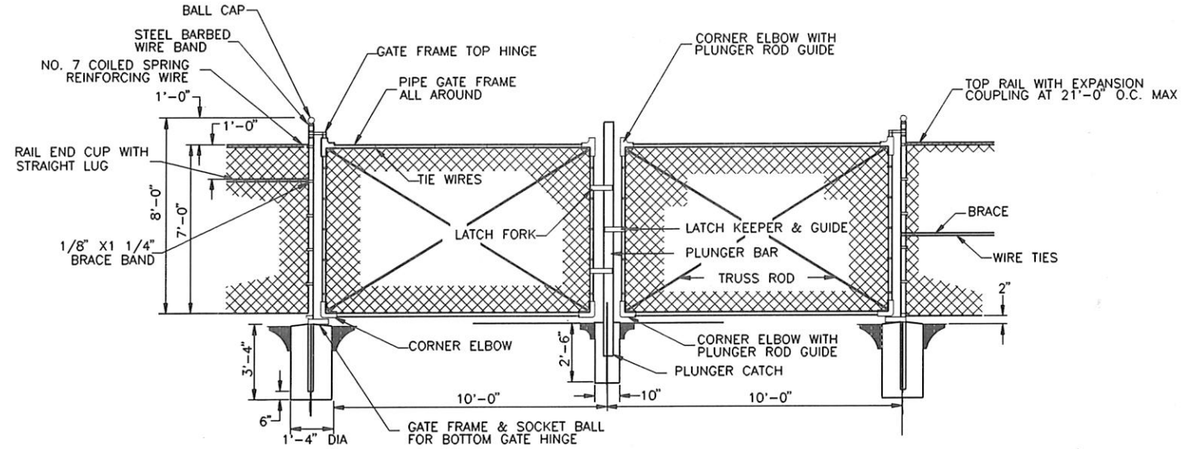

DOUBLE SWING GATE D
NOT TO SCALE

WARNING
THIS DRAWING REDUCED APPROX. ONE-HALF



PLOT SCALE 1=1
BELMISC3

NO.	REVISIONS	BY	DATE

DRAWN 7/89 JLT DATE — CHECKED 3/91 DATE
DESIGNED 3/91 DATE — PROJECT ENGINEER
APPROVED 4/91 DATE — PROJECT MANAGER

CITY OF BELLEVUE, IDAHO

FORSGREN ASSOCIATES / P.A.

WASTEWATER COLLECTION AND TREATMENT FACILITIES

MISCELLANEOUS DETAILS

PROJECT NO. 89067

SHEET NO. T-20

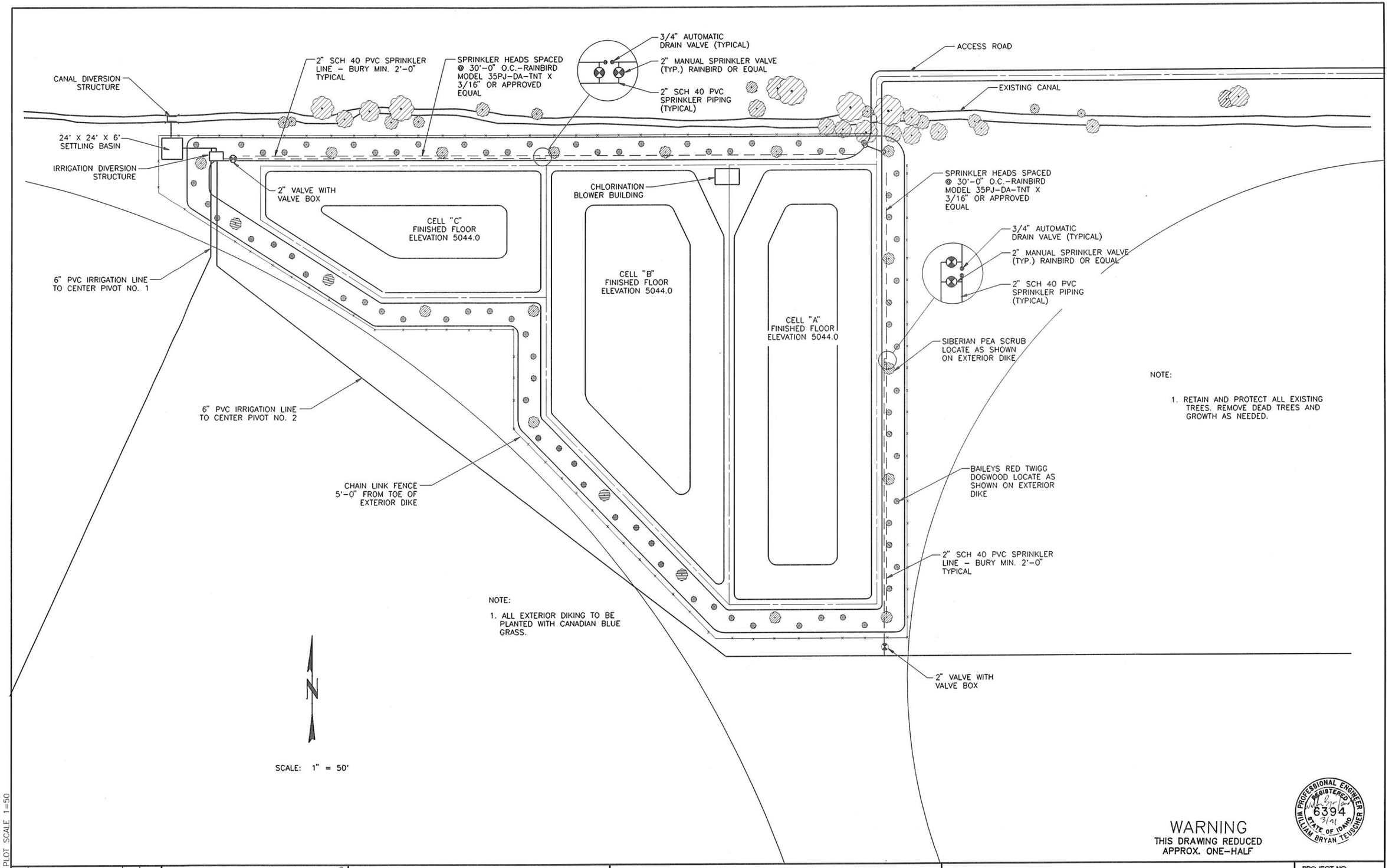

PROFESSIONAL ENGINEER REGISTERED 6394 STATE OF IDAHO WILLIAM BRYAN TEUSCHER 3/91

WARNING
THIS DRAWING REDUCED APPROX. ONE–HALF

BEL–LSCP PLOT SCALE 1=50

NO.	REVISIONS	BY	DATE

DRAWN RSS 1/91 DATE CHECKED 3/91 DATE
DESIGNED 3/91 DATE PROJECT ENGINEER
APPROVED 3/91 DATE PROJECT MANAGER

CITY OF BELLEVUE, IDAHO

FORSGREN ASSOCIATES / P.A.

WASTEWATER COLLECTION & TREATMENT FACILITIES

LAGOON LANDSCAPING PLAN

PROJECT NO. 89067

SHEET NO. T–21